CONSTRUCTION METHODS

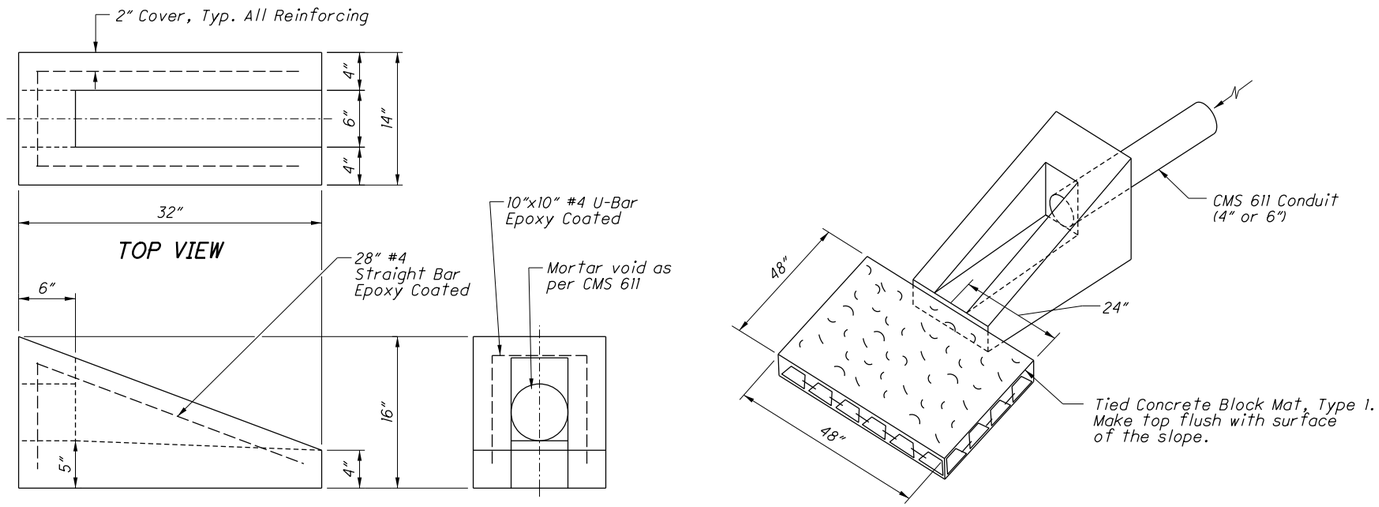

PRECAST REINFORCED CONCRETE OUTLET

NOTES

EROSION CONTROL PAD: Provide erosion control at the outlet of all farm drains except where they outlet into a drainage structure.

PAYMENT: Erosion control pads are included in the unit price bid for Item 611 - __ Inch Conduit, Type __ .

PRECAST REINFORCED CONCRETE OUTLET: Provide a concrete outlet that meets CMS 611 requirements.

PAYMENT: The precast reinforced concrete outlet are paid at the contract unit price bid for Item 611 - Precast Reinforced Concrete Outlet.

Tied Concrete Block Mat, Type 1 is paid at the contract unit price bid for Item 601 - Tied Concrete Block Mat, Type 1.

SPRING DRAIN: Aggregates, tarred paper, tarred burlap, or geotextile fabric backfill and necessary excavation for spring drains are included for payment in the unit price bid per Foot for Item 605 - Aggregate Drains for Springs.

PAYMENT: The pipe is included in the unit price bid per Foot for Item 605 - 6" Unclassified Pipe Underdrains for Springs.

MASONRY COLLARS: Provide a masonry collar where plans require that a pipe extension be joined to the end of an existing pipe with a butt joint. The cost is included in the unit price bid for the new conduit.

RIPRAP CUTOFF WALL: The cost of the cutoff wall is included in the unit price bid for Item 601 - Riprap Using 6" Reinforced Concrete Slab.

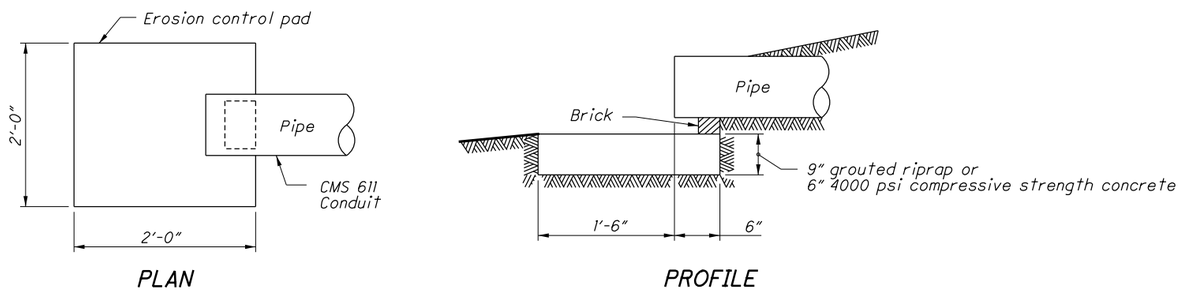

EROSION CONTROL PAD FOR OUTLET PIPE

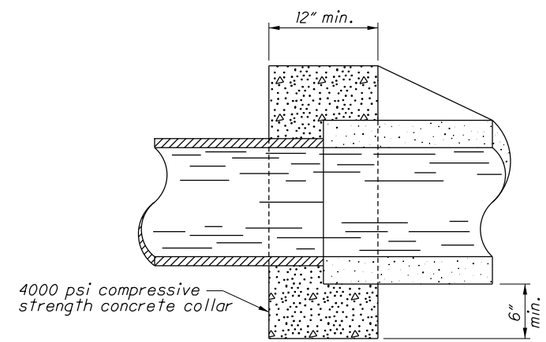

MASONRY COLLAR

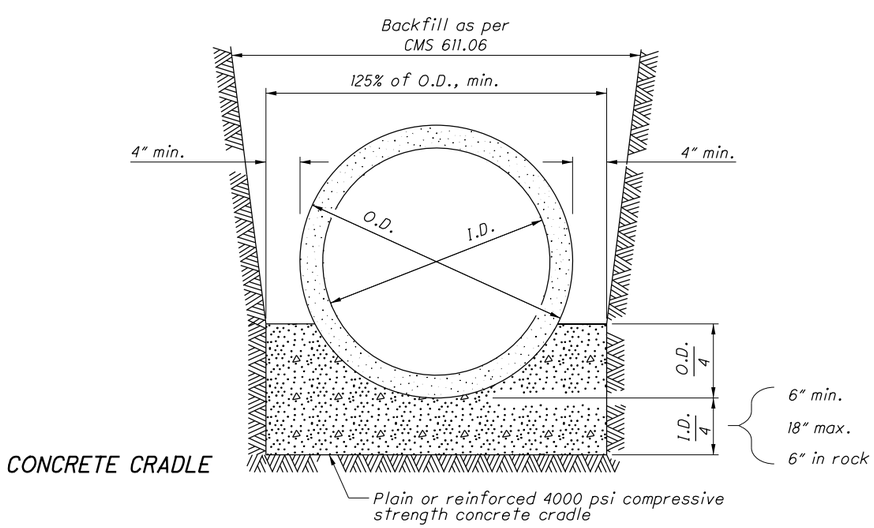

CONCRETE CRADLE

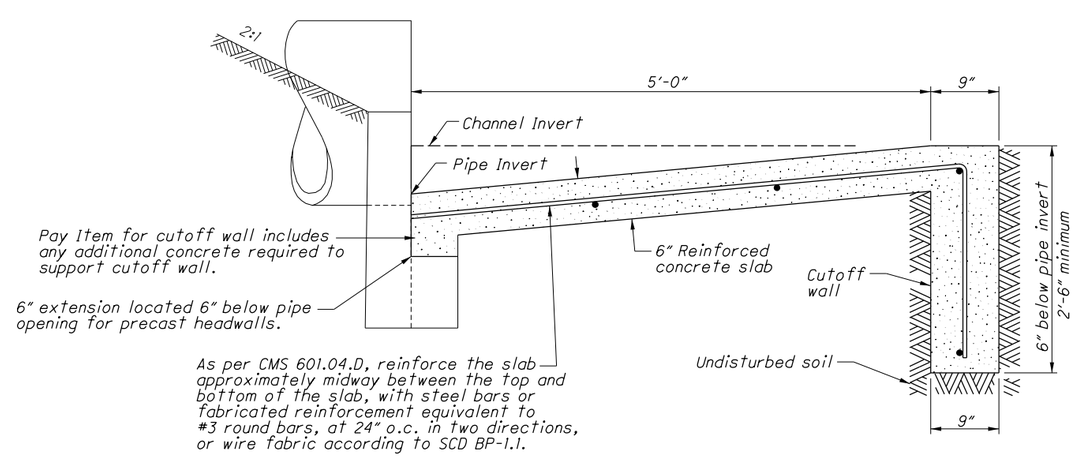

RIPRAP CUTOFF WALL

STATE OF OHIO DEPARTMENT OF TRANSPORTATION HYDRAULIC ENGINEER
Jeffery E. Syar

REVISIONS
1-21-05
10-21-05
4-21-06
1-21-11
7-20-12
1-18-13
1-15-16

ROADWAY HYDRAULIC ENGINEER
M. Cozzoli

OFFICE OF HYDRAULICS ENGINEERING

STANDARD HYDRAULIC CONSTRUCTION DRAWING
OUTLETS, DRAINS AND SEWERS

SCD NUMBER
DM-1.1

I:\ODOTcadd\Standards\ODOT\Sheets\SCD\Hydraulics\DM-1.1_2016-01-15.dgn Sheet 1 1/27/2017 10:26:46 AM jyoung6

SPRING DRAIN DETAIL

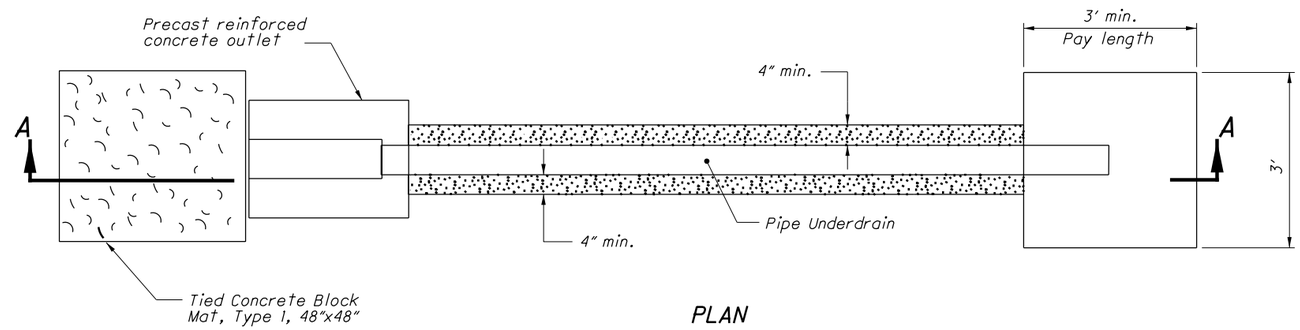

PLAN

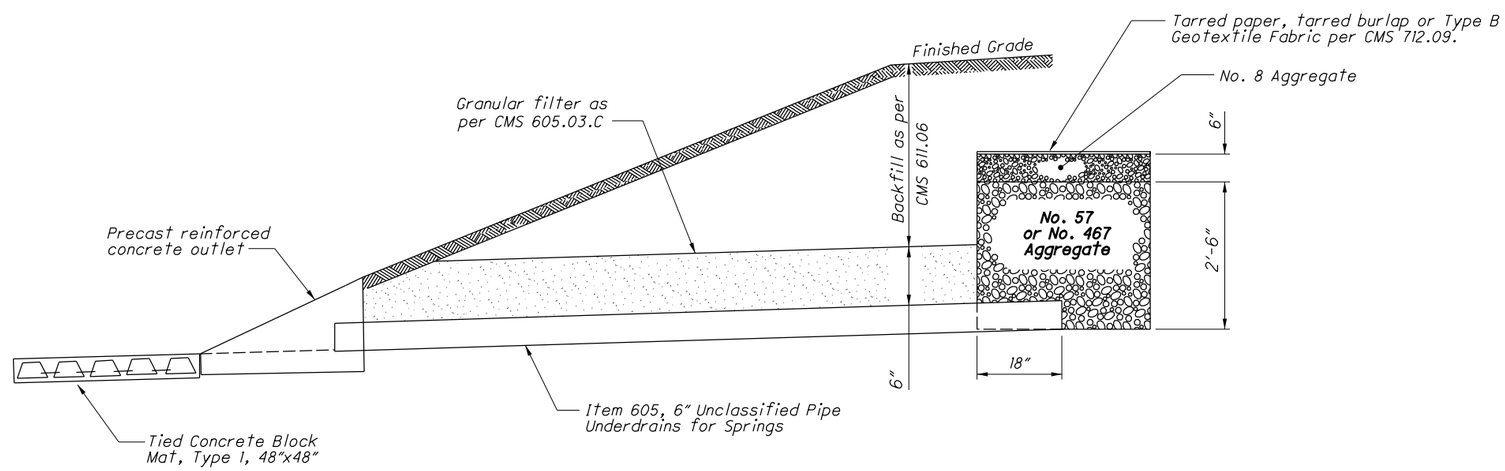

SECTION A-A

STATE OF OHIO DEPARTMENT OF TRANSPORTATION HYDRAULIC ENGINEER
Jeffery E. Syar

REVISIONS
1-21-05
10-21-05
4-21-06
1-21-11
7-20-12
1-18-13
1-15-16

ROADWAY HYDRAULIC ENGINEER
M. Cozzoli

OFFICE OF HYDRAULICS ENGINEERING

STANDARD HYDRAULIC CONSTRUCTION DRAWING
OUTLETS, DRAINS AND SEWERS

SCD NUMBER
DM-1.1

I:\ODOTcadd\Standards\ODOT\Sheets\SCD\Hydraulics\DM-1.1_2016-01-15.dgn Sheet 2 1/27/2017 10:26:46 AM jyoung6

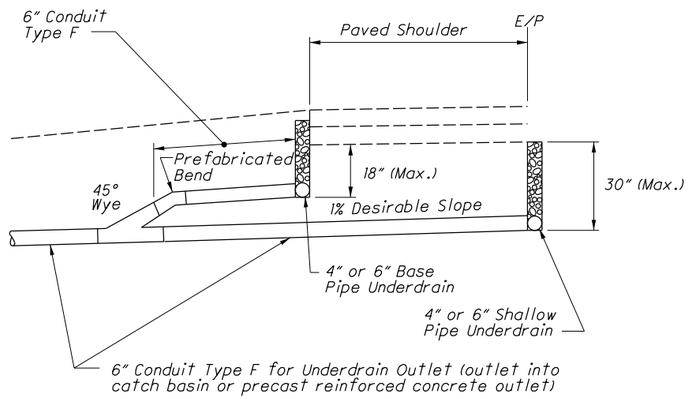

RIGID OR FLEXIBLE PAVEMENT
PROFILE

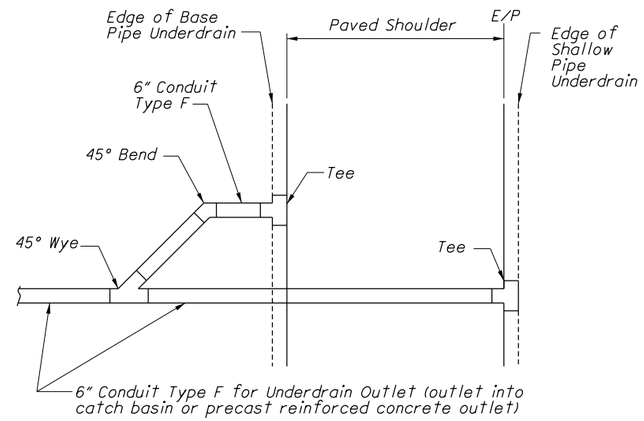

RIGID OR FLEXIBLE PAVEMENT
PLAN

NOTES

DESCRIPTION: *This item consists of furnishing and installing either a pipe underdrain system or a prefabricated edge underdrain system according to the specifications and with the details on the plans or as directed by the Engineer.*

MATERIALS: *Provide either a pipe underdrain system or a prefabricated edge underdrain system that meets the requirements of CMS 605.*

BASIS OF PAYMENT FOR PIPE UNDERDRAIN SYSTEM: *Work completed, accepted and measured under this item is paid for at the contract unit price bid for* ***Item 605 - ____" Base Pipe Underdrain, Item 605 - ____" Shallow Pipe Underdrain, or Item 605 ____" Deep Pipe Underdrain.*** *The price is full compensation for excavation and backfill; for furnishing materials, including materials for outlet fittings; and for all labor, tools, equipment and incidentals necessary to complete the work.*

BASIS OF PAYMENT FOR PREFABRICATED EDGE DRAIN SYSTEM: *Work completed, accepted and measured under this item is paid for at the contract unit price bid for* ***Item 605 - ____" Prefabricated Edge Underdrains.*** *The price is full compensation for excavation and backfill; for removing and disposing of all surplus excavation according to CMS 105.16 and 105.17; for furnishing materials, including materials for splices, outlet fittings, and Item 301; and for all labor, tools, equipment and incidentals necessary to complete the work associated with the installation of prefabricated edge underdrains.*

The cost of the 4" Conduit, Type F, and pipe bends and branches needed to connect the existing and proposed underdrains is included with the cost of the 6" Conduit, Type F, for Underdrain Outlets.

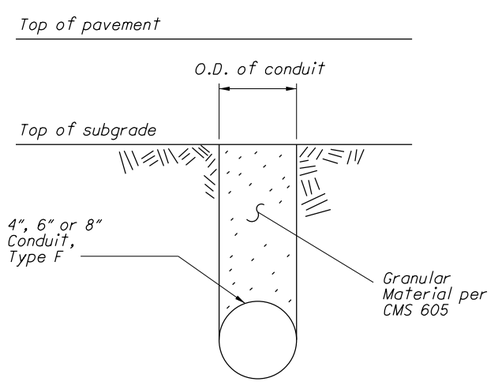

611 4", 6", or 8" Conduit, Type F Under Pavement or Base

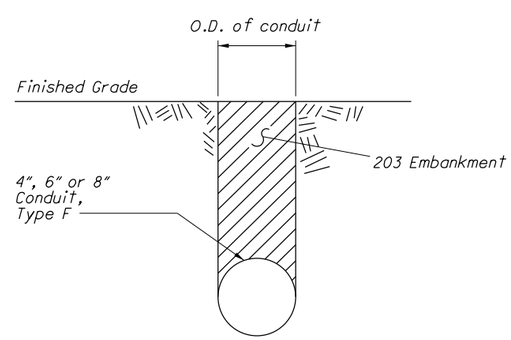

611 4", 6", or 8" Conduit, Type F Outside Pavement or Base

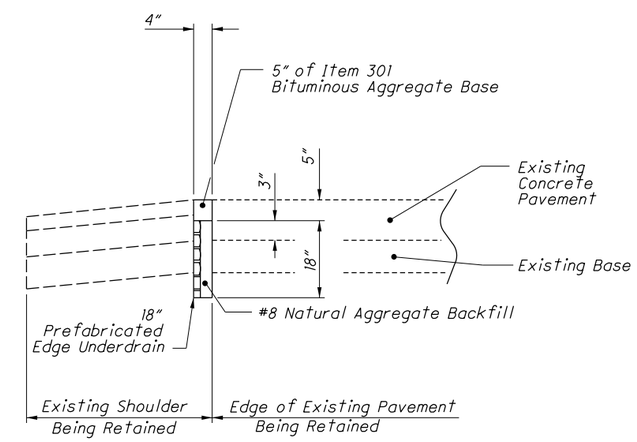

PREFABRICATED EDGE DRAIN SYSTEM

STATE OF OHIO DEPARTMENT OF TRANSPORTATION HYDRAULIC ENGINEER
Jeffery E. Syar

REVISIONS
7-20-01
7-19-02
1-21-05
10-21-05
7-20-12
1-18-13

ROADWAY HYDRAULIC ENGINEER
M. Cozzoli

OFFICE OF HYDRAULICS ENGINEERING

STANDARD HYDRAULIC CONSTRUCTION DRAWING
PIPE UNDERDRAINS

SCD NUMBER
DM-1.2

I:\ODOTcadd\Standards\ODOT\Sheets\SCD\Hydraulics\DM-1.2_2013-01-18.dgn Sheet 1/27/2017 10:19:41 AM jyoung6

TYPE 1

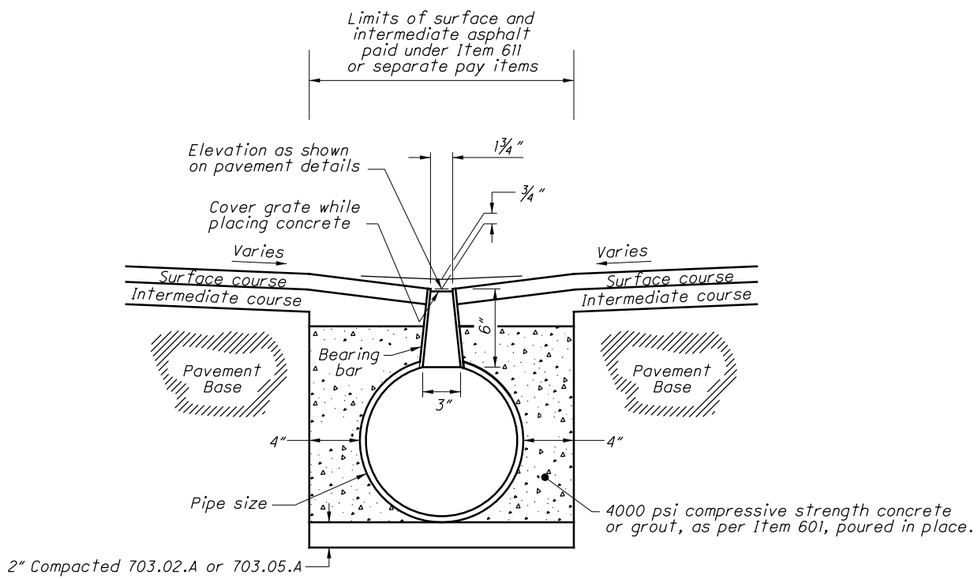

SECTION A-A

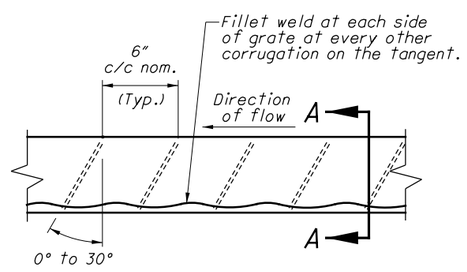

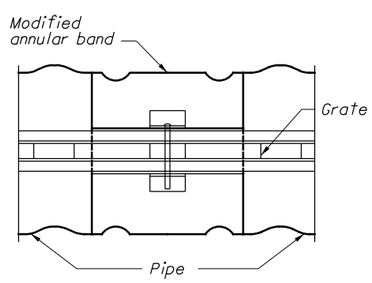

PLAN

NOTE: Provide a continuous bearing bar by means of a slot or plate through the joint.

____" SLOTTED DRAIN, TYPE 1

(Refer to Sample Plan Note D120)

TYPE 2

NOTE: The asphalt surface course shall be placed ¼" higher than the outside edge of the concrete surface.

[1] Surface on the side shall be formed to provide a straight edge for the top 3".

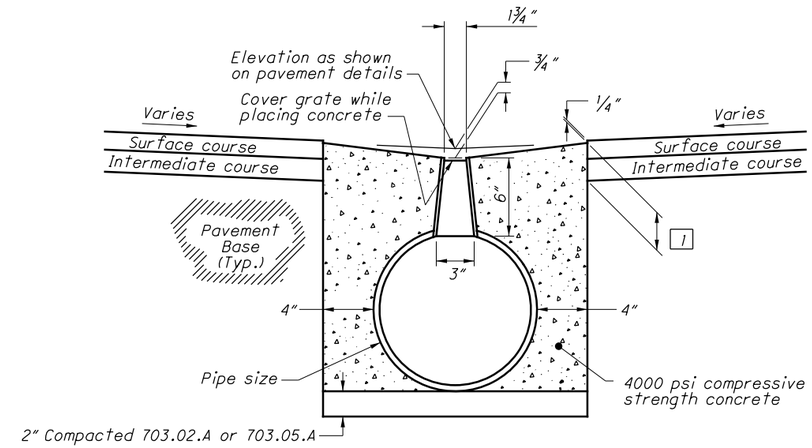

SECTION B-B

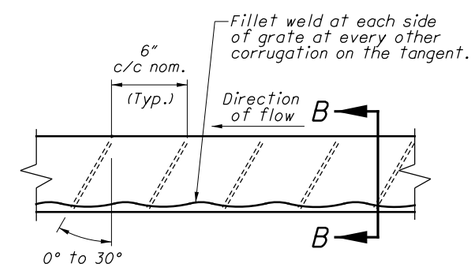

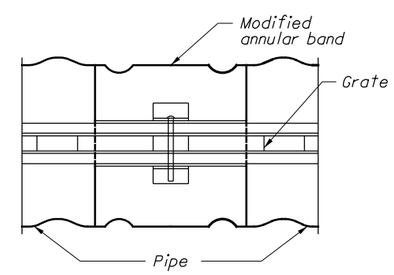

PLAN

NOTE: Provide a continuous bearing bar by means of a slot or plate through the joint.

____" SLOTTED DRAIN, TYPE 2

(Refer to Sample Plan Note D120)

STATE OF OHIO DEPARTMENT OF TRANSPORTATION HYDRAULIC ENGINEER
Jeffery E. Syar

REVISIONS
7-20-01
10-19-12
1-18-13
7-18-14

ROADWAY HYDRAULIC ENGINEER
M. Cozzoli

OFFICE OF HYDRAULICS ENGINEERING

STANDARD HYDRAULIC CONSTRUCTION DRAWING
SLOTTED DRAINS

SCD NUMBER
DM-1.3

I:\ODOTcadd\Standards\ODOT\Sheets\SCD\Hydraulics\DM-1.3_2014-07-18.dgn Sheet 1/27/2017 10:19:50 AM jyoung6

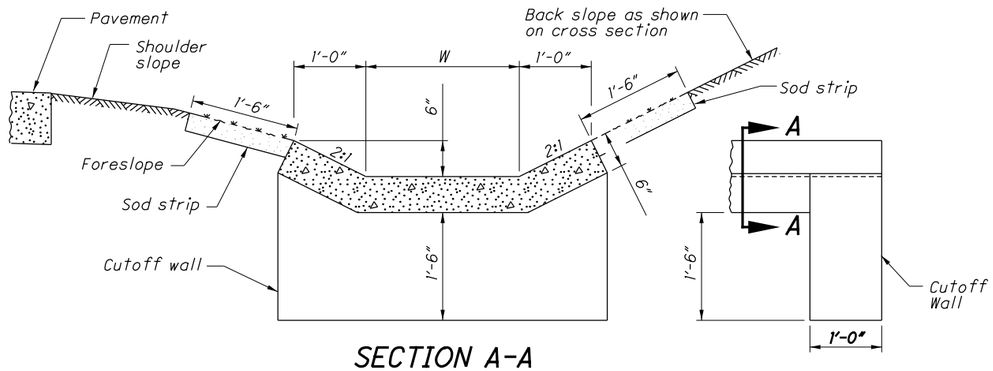

SECTION A-A

TYPE 1-2 W=2'-0"
TYPE 1-4 W=4'-0"
TYPE 1-6 W=6'-0"

SIDE VIEW

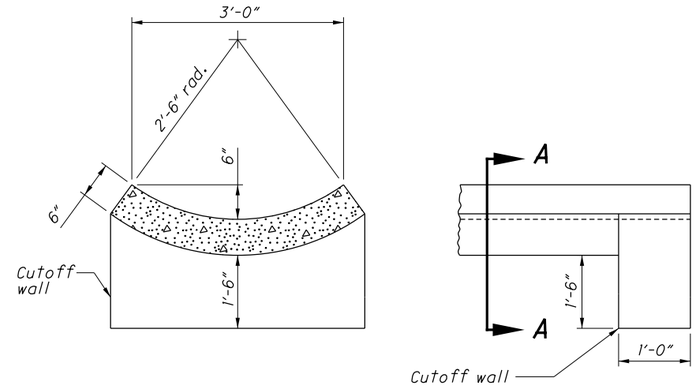

SECTION A-A

SIDE VIEW

TYPE 2

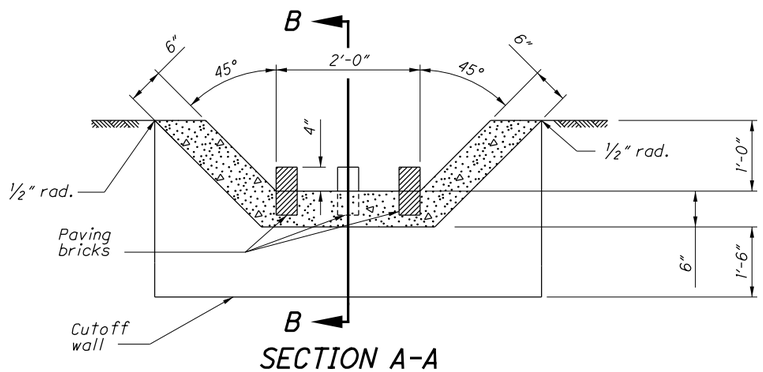

SECTION A-A

TYPE 3

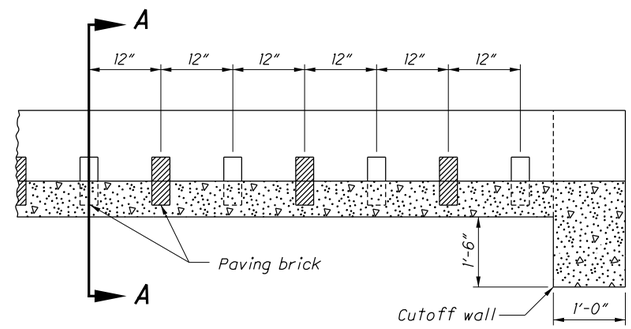

SECTION B-B

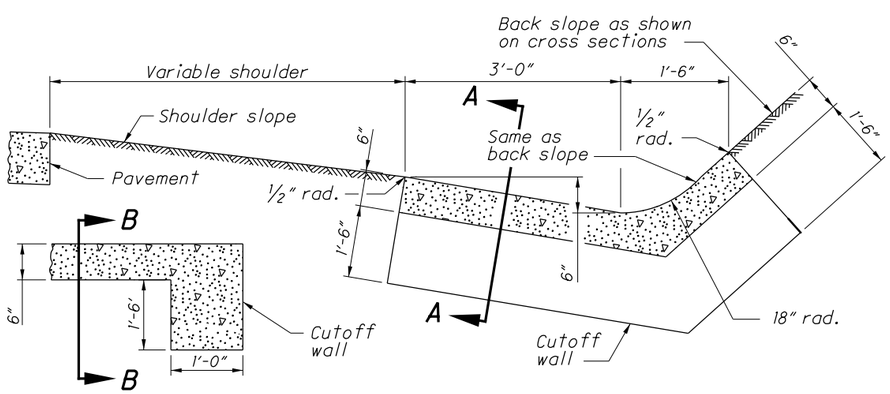

SECTION A-A

SECTION B-B

TYPE 4

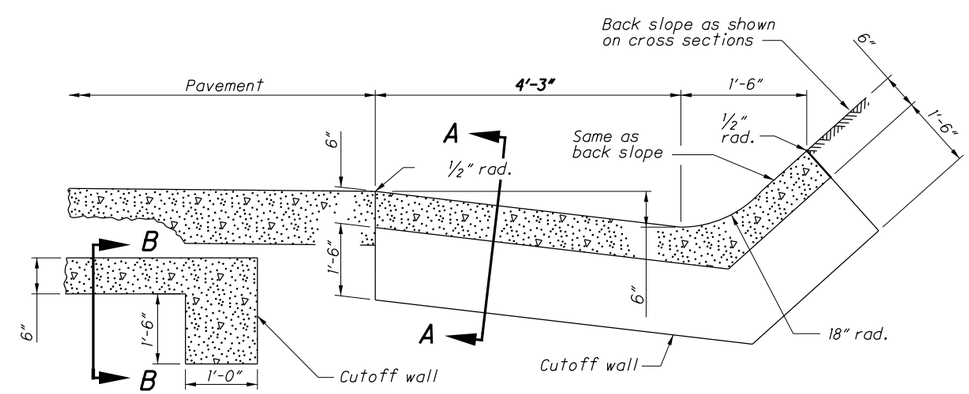

SECTION A-A

SECTION B-B

TYPE 5

STANDARD PAVED GUTTERS

NOTES

GENERAL: Construct gutters with 4000 psi compressive strength concrete, stone or brick.

The thickness of the gutter shown is for concrete construction. If stone or brick is used it must be grout-filled, and increase the gutter thickness to 8" minimum.

Type 3 Gutter with baffles may be used for steep slopes. Furnish new or used paving bricks or precast concrete blocks of similar dimension and place gutter blocks with the outside blocks in one row staggered with the center blocks at 12" on center longitudinally or as shown on plan.

CONSTRUCTION: Impress concrete gutter contraction joints and space at 10 foot intervals unless otherwise specified.

Construct concrete cutoff walls at the beginning and end of a gutter run except where the gutter connects with a catch basin or inlet.

The cost of cutoff walls is included in the unit price bid for the gutter.

SOD: Install and pay for sod according to CMS 660.

STATE OF OHIO DEPARTMENT OF TRANSPORTATION HYDRAULIC ENGINEER
Jeffery E. Syar

REVISIONS
7-20-01
7-20-12
1-18-13

ROADWAY HYDRAULIC ENGINEER
M. Cozzoli

OFFICE OF HYDRAULICS ENGINEERING

STANDARD HYDRAULIC CONSTRUCTION DRAWING
PAVED GUTTERS

SCD NUMBER
DM-2.1

1 / 1

I:\ODOTcadd\Standards\ODOT\Sheets\SCD\Hydraulics\DM-2.1_2013-01-18.dgn Sheet 1/27/2017 10:19:57 AM jyoung6

INSPECTION WELL

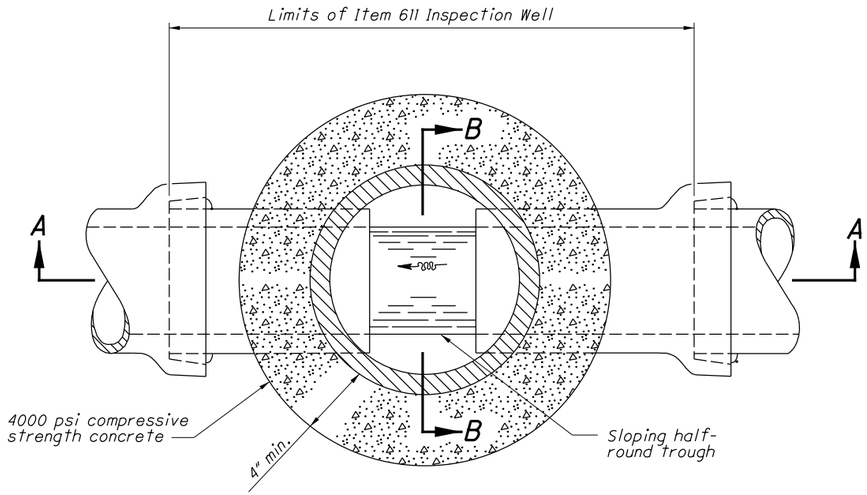

SECTION C-C

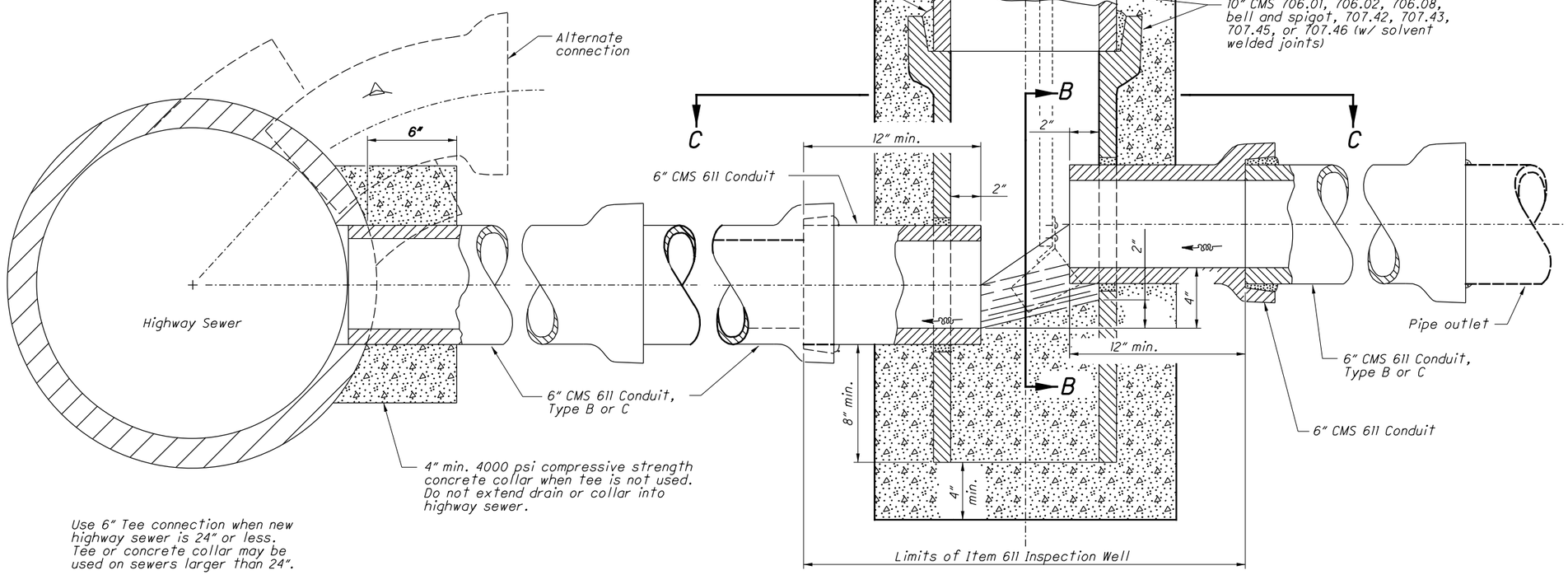

Use 6" Tee connection when new highway sewer is 24" or less. Tee or concrete collar may be used on sewers larger than 24".

SECTION A-A
ELEVATION

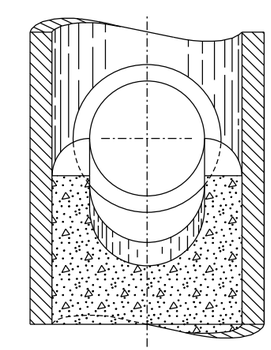

SECTION B-B

NOTES

GENERAL: Advise the Engineer of all private drains encountered if connected to a building, septic tank, cesspool, filter bed, or treatment plant or if discharging polluted water of any kind.

Connect such drains to the highway drainage system (requires official permit) or plug them as directed by the Engineer.

If connected to the highway storm sewer system, construct an inspection well as detailed here on each such drain unless the drain is to be connected to a catch basin, inlet or manhole or is to discharge into an open channel or ditch.

The cost of tapping the highway sewer, including the concrete collar or tee, is included in the unit price bid per Foot of **Item 611 - Conduit.**

When PVC pipe is used for the riser section of the Inspection Well, form a recessed bell area in the concrete at the top of the well to receive the cast iron cover.

Component parts of the inspection well may be job or factory cut and job assembled.

PAYMENT: The work included in this item must comply with the provisions of CMS 611, including excavation and backfill, and is paid for at the contract unit price bid per **Item 611 - Inspection Well** (each) complete in place.

STATE OF OHIO DEPARTMENT OF TRANSPORTATION HYDRAULIC ENGINEER
Jeffery E. Syar

REVISIONS
7-20-01
7-19-02
7-20-12
1-18-13

ROADWAY HYDRAULIC ENGINEER
M. Cozzoli

OFFICE OF HYDRAULICS ENGINEERING

STANDARD HYDRAULIC CONSTRUCTION DRAWING
INSPECTION WELL

SCD NUMBER
DM-3.1

I:\ODOTcadd\Standards\ODOT\Sheets\SCD\Hydraulics\DM-3.1_2013-01-18.dgn Sheet 1/27/2017 10:20:03 AM jyoung6

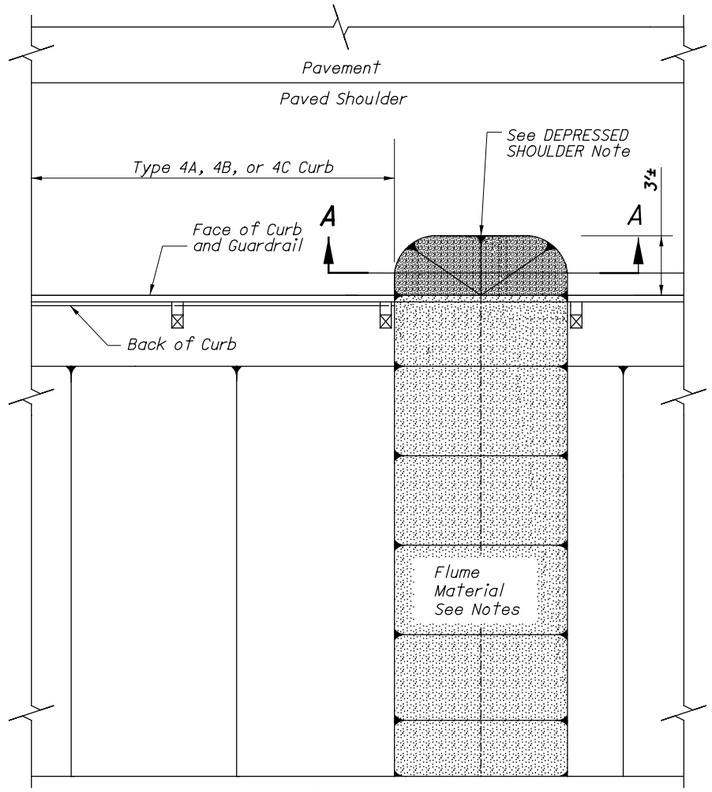

PLAN

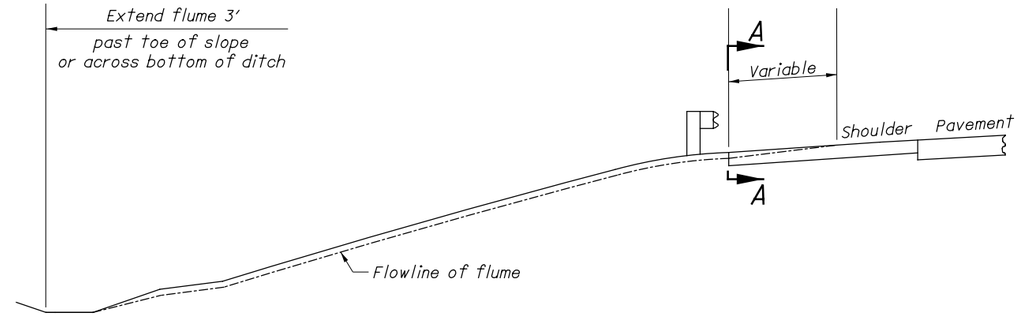

PROFILE

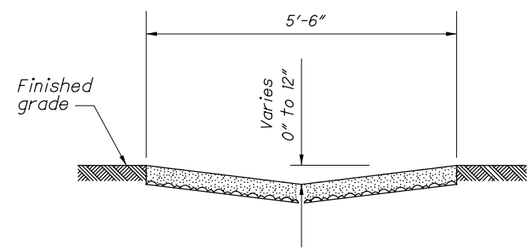

FLUME INSTALLATION DETAIL

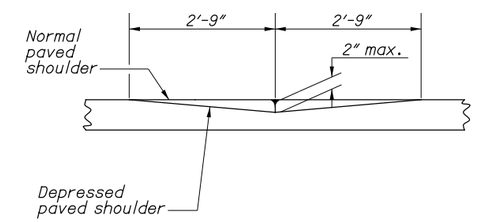

Section A-A

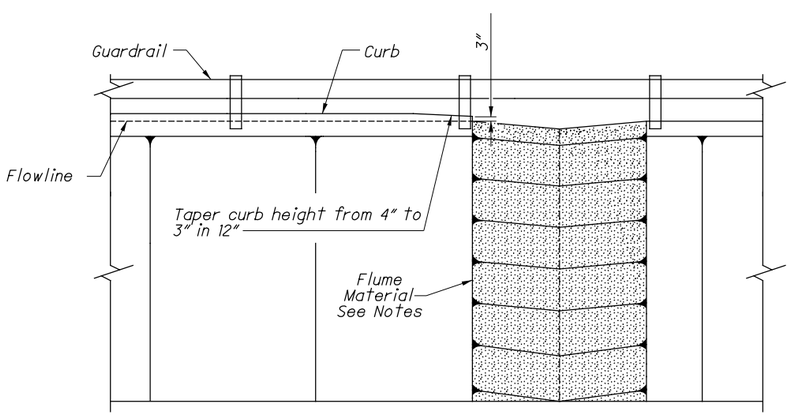

ELEVATION

NOTES

DEPRESSED SHOULDER:
Depress this portion of the shoulder to ensure positive drainage into the flume.

FLUME MATERIAL:
Provide Item 601 Tied Concrete Block Mat, Type 2 on Geotextile Fabric as shown in the plans. Start Tied Concrete Block Mat at the face of the guardrail. Anchor the upstream end of the mat.

Shape the flume as shown, vary the depth to match the depressed shoulder depth at the top of the slope and to lay the mat flat at the toe of the slope. Provide the max. depth along the slope.

PAYMENT:
Payment for all of the above is included in the unit price bid for item 601, Tied Concrete Block Mat, Type 2, square yard.

STATE OF OHIO DEPARTMENT OF TRANSPORTATION HYDRAULIC ENGINEER
Jeffery E. Syar

REVISIONS
10-15-10
1-21-11
10-21-11
7-20-12
7-19-13
1-15-16
7-20-18

ROADWAY HYDRAULIC ENGINEER
M. Cozzoli

OFFICE OF HYDRAULICS ENGINEERING

STANDARD HYDRAULIC CONSTRUCTION DRAWING
EROSION CONTROL FLUME AT BRIDGES

SCD NUMBER
DM-4.1

I:\hy\Standard Drawings\Update July 2018\DM-4.1\DM-4.1_2018-07-20.dgn 6/12/2018 12:48:11 PM kbrandon

NON-EXCELSIOR EROSION CONTROL MAT INSTALLATION

(FOR EXCELSIOR EROSION CONTROL MATS, SEE BELOW)

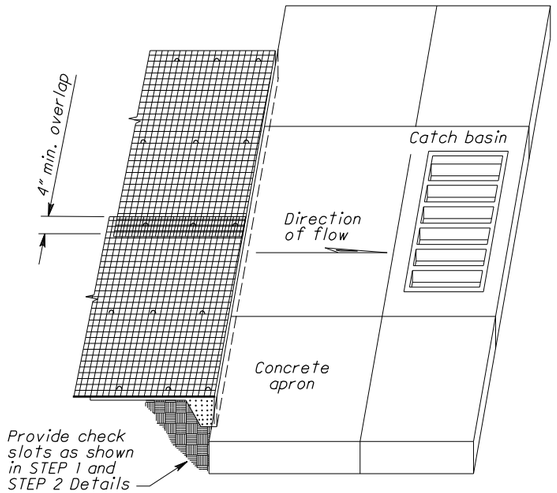

CHECK SLOT AT STRUCTURES

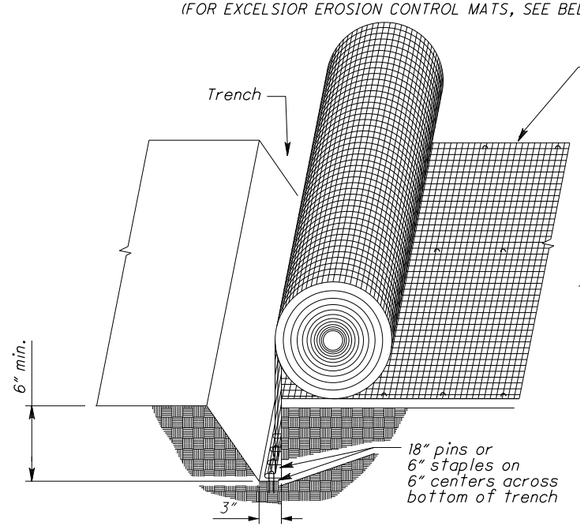

STEP 1

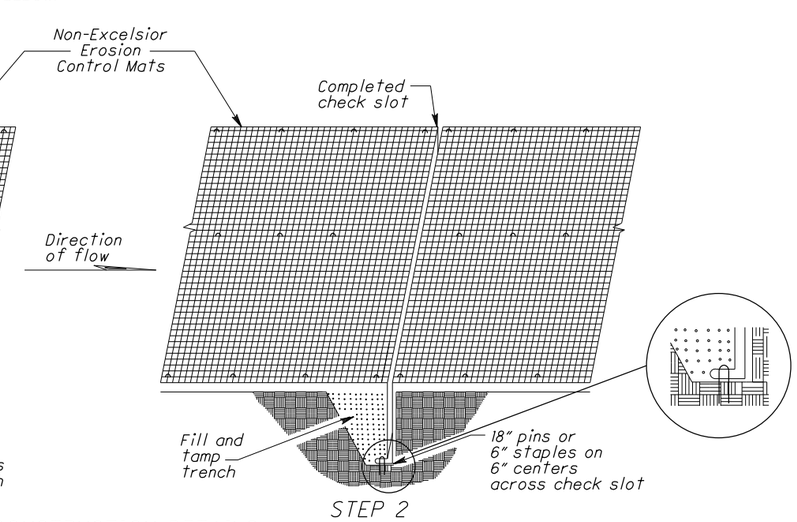

STEP 2

CHECK SLOT CONSTRUCTION DETAILS

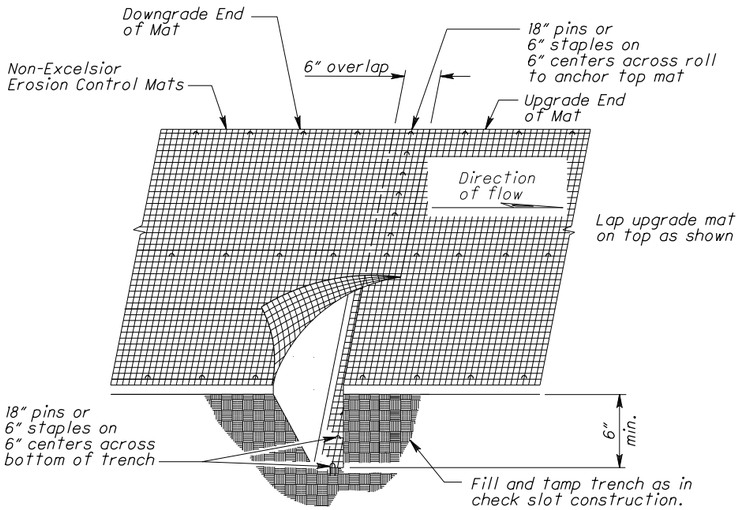

END OF ROLL OVERLAP

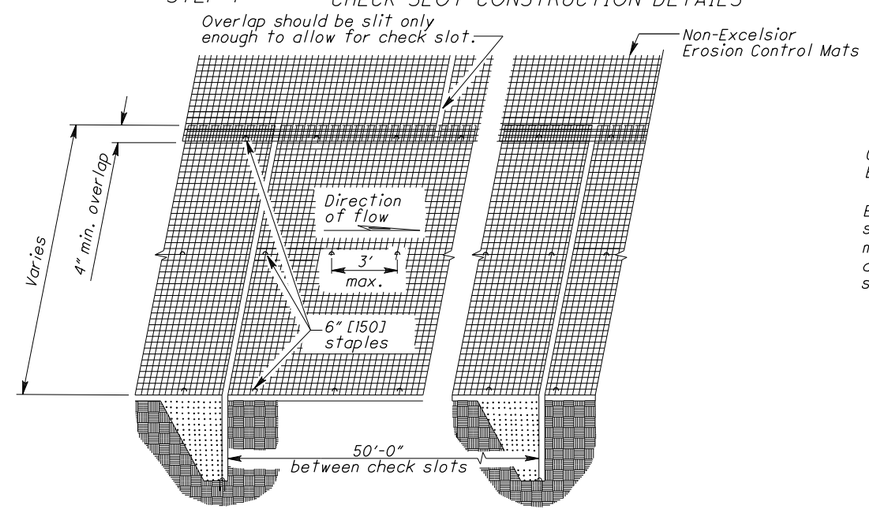

TYPICAL INSTALLATION

NOTES

GENERAL: The details shown govern the installation of Erosion Control Mats unless otherwise shown in the plan.

END OF RUN: Use a check slot and staple or pin in the slot as shown in END OF ROLL OVERLAP Detail for all mats excluding excelsior mats. When placing matting for all ditch protection, start at the downstream end, as shown in the CHECK SLOT AT STRUCTURES Detail.

EXCELSIOR EROSION CONTROL MAT INSTALLATION

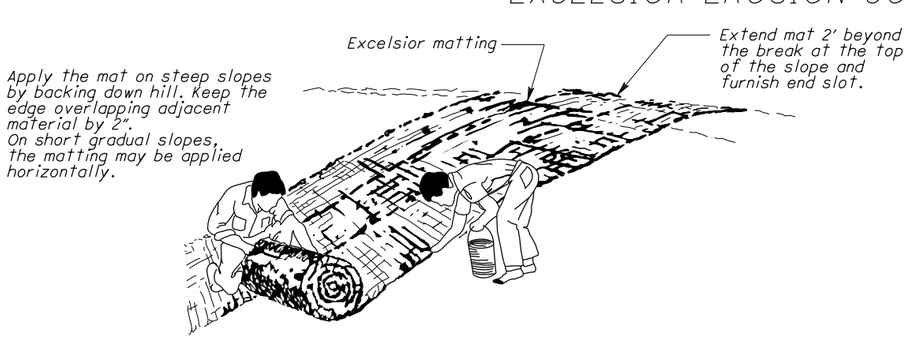

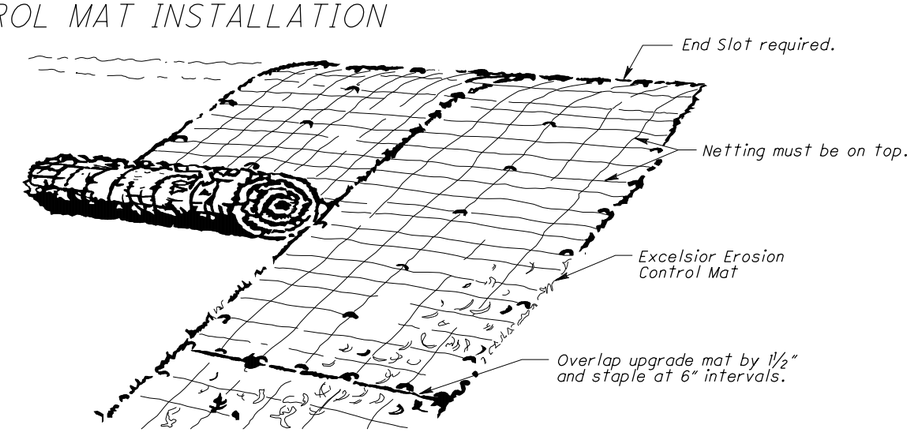

STATE OF OHIO DEPARTMENT OF TRANSPORTATION HYDRAULIC ENGINEER
Jeffery E. Syar

REVISIONS
7-20-01
7-19-02
1-21-05
7-20-12

ROADWAY HYDRAULIC ENGINEER
M. Cozzoli

OFFICE OF HYDRAULICS ENGINEERING

STANDARD HYDRAULIC CONSTRUCTION DRAWING
EROSION CONTROL MAT

SCD NUMBER
DM-4.2

1/1

I:\ODOTcadd\Standards\ODOT\Sheets\SCD\Hydraulics\DM-4.2_2012-07-20.dgn Sheet 1/27/2017 10:20:16 AM jyoung6

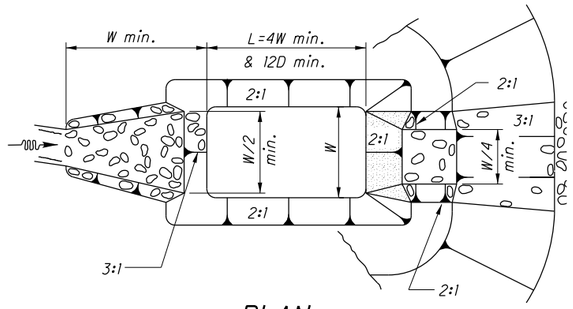

PLAN

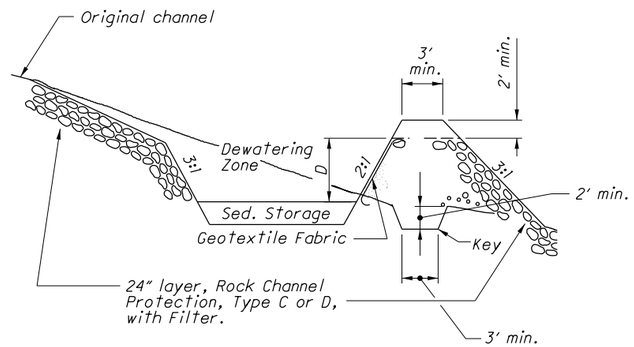

PROFILE

SEDIMENT DAM

(Drainage Area of Less than 5 Acres)

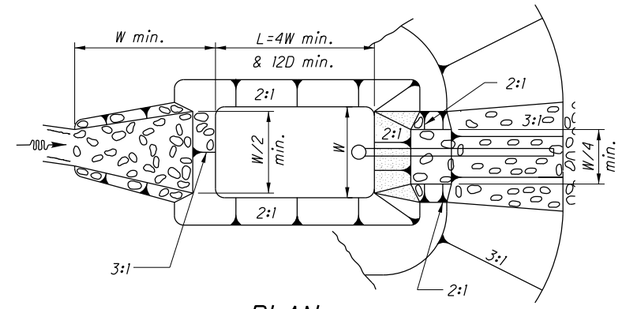

PLAN

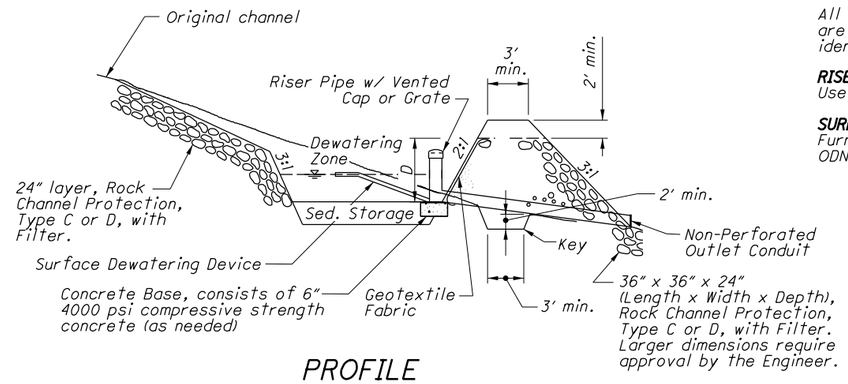

PROFILE

SEDIMENT DAM

(Drainage Area of 5 Acres or More)

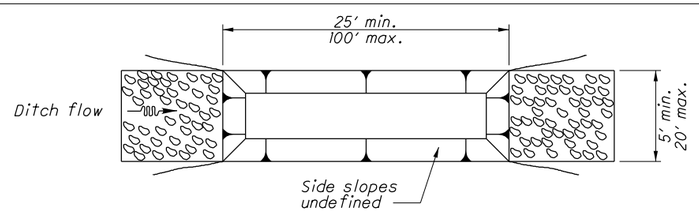

PLAN

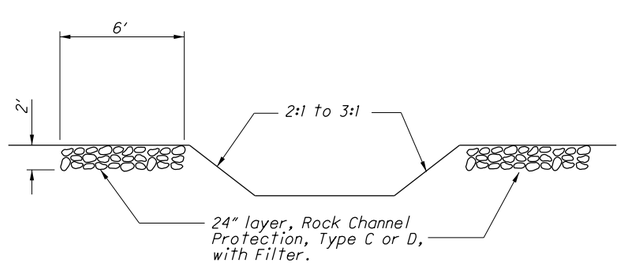

PROFILE

SEDIMENT BASIN

(Drainage Area of Less than 5 Acres)

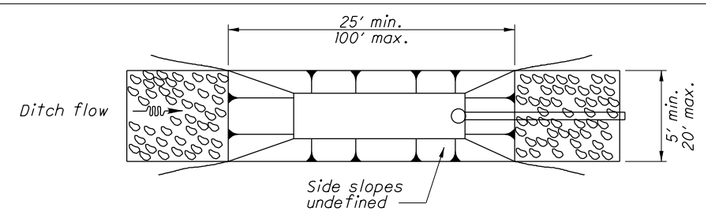

PLAN

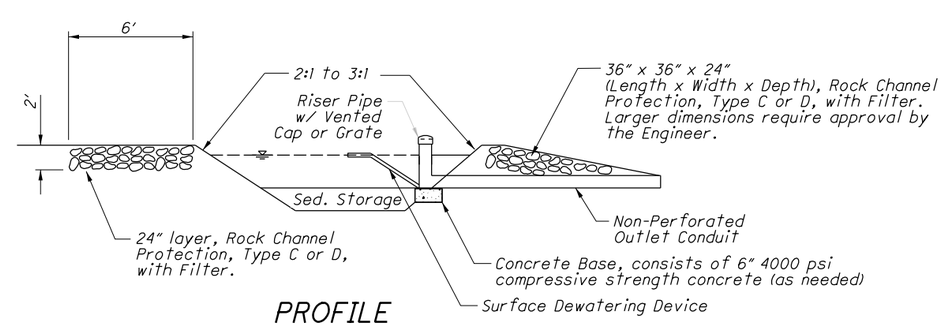

PROFILE

SEDIMENT BASIN

(Drainage Area of 5 Acres or More)

NOTES

MATERIAL:
Furnish materials conforming to Item 203, Embankment, and Item 601, Rock Channel Protection, Type C or D with filter. Furnish construction fence consisting of 4'-0" high plastic fence with 6' long metal fence posts.

CONSTRUCTION:
Construct the Basin and Dams as detailed. Construct the construction fence in urban areas or in high pedestrian traffic areas. Construct the fence to completely surround the sediment basin or dam. Place the fence post on 8' centers, 2' deep. Securely attach the plastic construction fence to the fence post.

PAYMENT:
The Department will pay for accepted quantities at the prices shown in Appendix F of Supplemental Specification 832 (SS832) for the following items:

- Sediment Basins and Dams
- Rock Channel Protection, Type C or D, with Filter

All items shown on this Standard Construction Drawing that are required for construction that are not specifically identified in SS832 Appendix F are considered incidental.

RISER PIPE:
Use schedule 40 Polyvinyl Chloride Conduit.

SURFACE DEWATERING DEVICE:
Furnish surface dewatering device as required by the ODNR Rainwater and Land Development Manual.

STATE OF OHIO DEPARTMENT OF TRANSPORTATION HYDRAULIC ENGINEER
Jeffery E. Syar

REVISIONS
11-26-08
4-17-09
7-20-12
1-18-13
7-19-13
1-15-16

ROADWAY HYDRAULIC ENGINEER
M. Cozzoli

OFFICE OF HYDRAULICS ENGINEERING

STANDARD HYDRAULIC CONSTRUCTION DRAWING

SEDIMENT AND EROSION CONTROLS

SCD NUMBER
DM-4.3

I:\ODOTcadd\Standards\ODOT\Sheets\SCD\Hydraulics\DM-4.3_2016-01-15.dgn Sheet 1 1/27/2017 10:26:59 AM jyoung6

DIKES AND SLOPE DRAINS

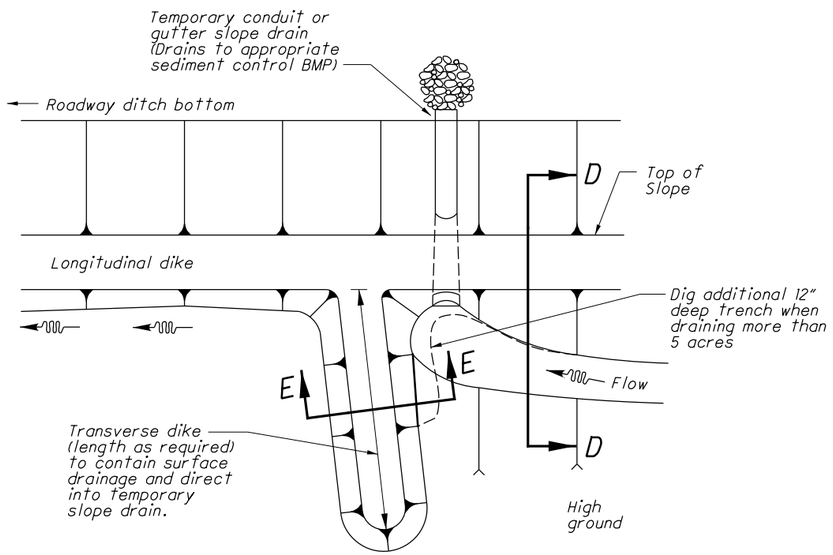

PLAN VIEW

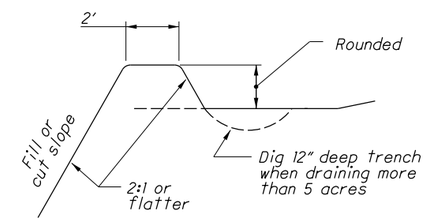

SECTION D-D

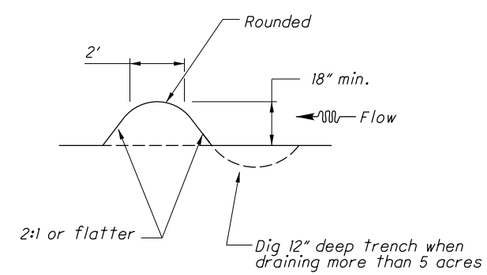

SECTION E-E

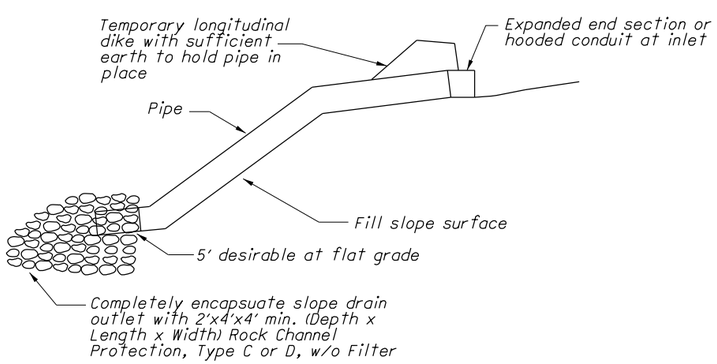

CONDUIT SLOPE DRAIN

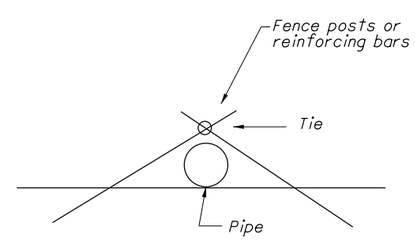

TIE-DOWN SLOPE DRAIN

NOTES

MATERIAL:
Furnish materials conforming to Item 203, Embankment, and Item 601, Rock Channel Protection, Type C or D, without filter.

Furnish the following for the slope drains: corrugated steel pipe, corrugated or smooth plastic pipe, reinforcing bars or fence posts.

CONSTRUCTION:
Construct as detailed. Compact the dike to 85% of Standard Proctor.

Use reinforcing bars or fence posts to tie down the slope drains and to keep the pipe from moving.

Ensure that the water entering the slope drain inlet does not erode or degrade the dike section containing the temporary conduit.

PAYMENT:
The Department will pay for accepted quantities at the prices shown in Appendix F of Supplemental Specification 832 (SS832) for the following items:

- Slope Drains
- Dikes
- Rock Channel Protection, Type C or D, Without Filter

All items shown on this Standard Construction Drawing that are required for construction that are not specifically identified in SS832 Appendix F are considered incidental.

TEMPORARY SLOPE DRAINS RECOMMENDED SIZES

AREA in acres	PIPE SIZES	
	Smooth	Corrugated
0-4	6"	6"
4-8	8"	12"
8-12	10"	15"

STATE OF OHIO DEPARTMENT OF TRANSPORTATION HYDRAULIC ENGINEER
Jeffery E. Syar

REVISIONS
11-26-08
4-17-09
7-20-12
1-18-13
7-19-13
1-15-16

ROADWAY HYDRAULIC ENGINEER
M. Cozzoli

OFFICE OF HYDRAULICS ENGINEERING

STANDARD HYDRAULIC CONSTRUCTION DRAWING
SEDIMENT AND EROSION CONTROLS

SCD NUMBER
DM-4.3

I:\ODOTcadd\Standards\ODOT\Sheets\SCD\Hydraulics\DM-4.3_2016-01-15.dgn Sheet 2 1/27/2017 10:27:00 AM jyoung6

DITCH CHECKS

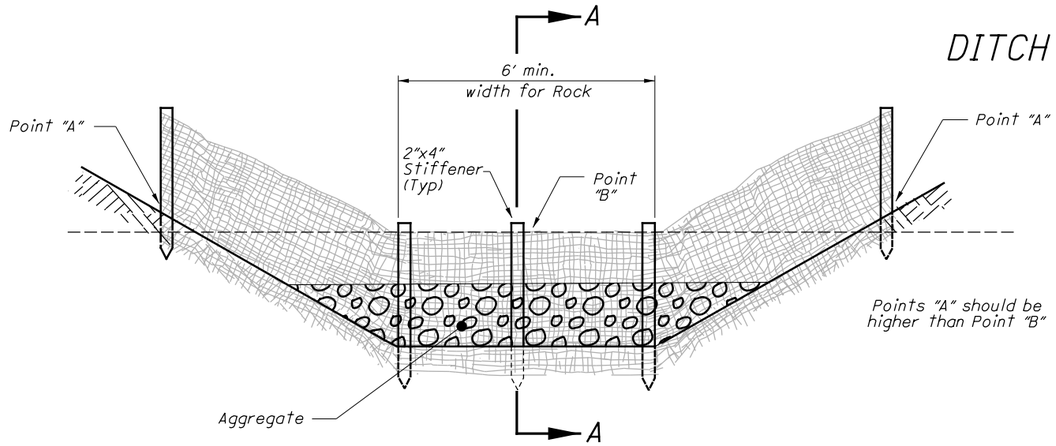

CROSS-SECTIONAL VIEW OF FLAT BOTTOM DITCH

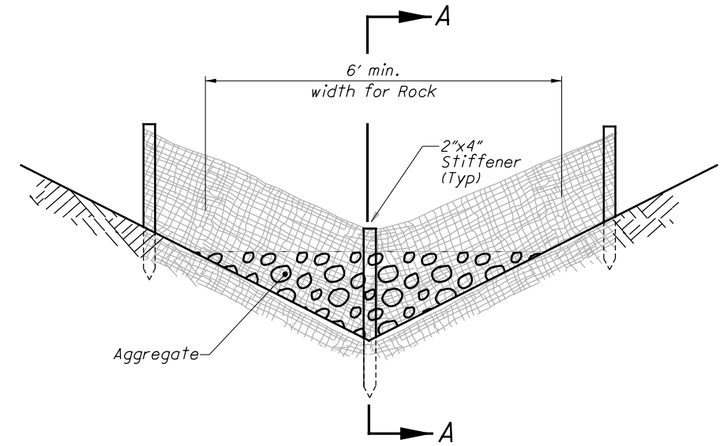

CROSS-SECTIONAL VIEW OF "V" DITCH

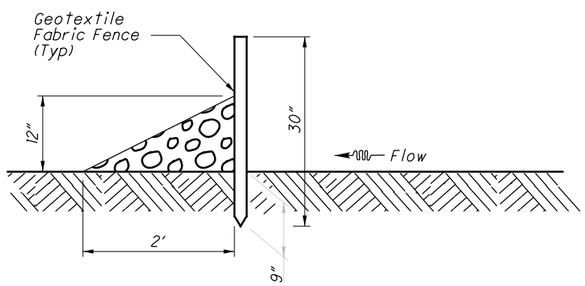

PROFILE VIEW OF FLAT BOTTOM AND V DITCH
SECTION A-A

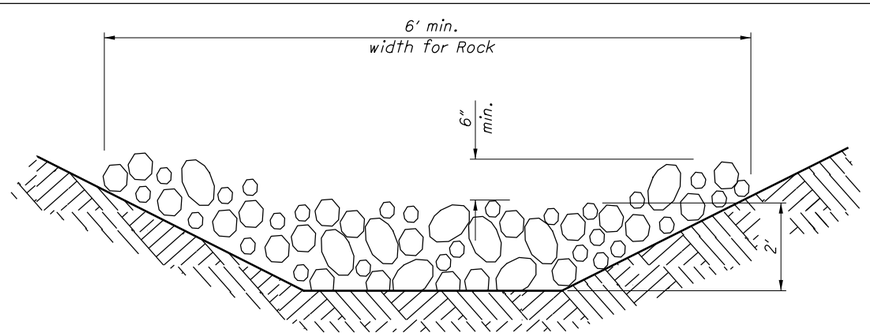

Minimum dimensions: 2′ high x 6′ wide x 3′ long

CROSS-SECTIONAL VIEW
ROCK CHECK

NOTES

GEOTEXTILE FABRIC DITCH CHECKS:

MATERIALS:
Furnish geotextile fabric ditch checks consisting of the following materials:

1. 30" wide geotextile fabric with sound wood supports with maximum on-center spacing of 10′. Use geotextile fabric conforming to 712.09, Type C.
2. A vertically driven 2"x4" stiffener stake in the center of the ditch.
3. Aggregate conforming to one of the following gradations: No. 1 through No. 4 on Table 703.01-1.

When using straw bales, furnish 30" long 2"x2" wooden stakes, reinforcing bars or fence posts to stake straw bales in place.

CONSTRUCTION:
Trench the geotextile fabric fence as detailed for PERIMETER GEOTEXTILE FABRIC FENCE (see Sheet 2). Place a vertical 2"x4" stiffener stake in the center of the ditch with the top level to the top of the fence and at least 6" below the bottom of the ditch. Excavate for aggregate and place the aggregate on the downstream side of the ditch check.

If the Engineer determines that rock should not be used for the geotextile fabric ditch checks, replace aggregate with straw bales configured with minimal gaps between bales. Tightly place each bale adjacent to one another. Entrench 2" to 3" into the ground prior to staking. Firmly stake each bale with at least two stakes.

PAYMENT:
The Department will pay for accepted quantities at the prices shown in Appendix F of Supplemental Specification 832 (SS832) for the following items:

- Geotextile Fabric Ditch Check

All items shown on this Standard Construction Drawing that are required for construction that are not specifically identified in SS832 Appendix F are considered incidental.

NOTES

ROCK CHECKS:

MATERIALS:
Furnish material conforming to Item 601 - Rock Channel Protection, Type C or D, Without Filter.

CONSTRUCTION:
If the Engineer determines that rock should not be used for the rock checks, replace rock channel protection with straw bales configured with minimal gaps between bales. Tightly place each bale adjacent to one another. Entrench 2" to 3" into the ground prior to staking. Firmly stake each bale with at least two stakes.

PAYMENT:
The Department will pay for accepted quantities at the prices shown in Appendix F of Supplemental Specification 832 (SS832) for the following items:

- Rock Channel Protection, Type C or D, Without Filter

All items shown on this Standard Construction Drawing that are required for construction that are not specifically identified in SS832 Appendix F are considered incidental.

STATE OF OHIO DEPARTMENT OF TRANSPORTATION HYDRAULIC ENGINEER
Jeffery E. Syar

REVISIONS
4-29-02
7-19-02
12-01-08
4-17-09
7-20-12
1-15-16

ROADWAY HYDRAULIC ENGINEER
M. Cozzoli

OFFICE OF HYDRAULICS ENGINEERING

STANDARD HYDRAULIC CONSTRUCTION DRAWING
CONSTRUCTION EROSION CONTROL

SCD NUMBER
DM-4.4

I:\ODOTcadd\Standards\ODOT\Sheets\SCD\Hydraulics\DM-4.4_2016-01-15.dgn Sheet 1 1/27/2017 10:27:13 AM jyoung6

PERIMETER GEOTEXTILE FABRIC FENCE

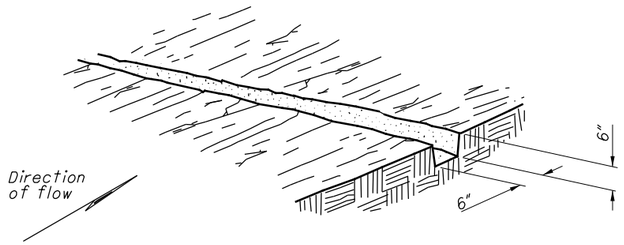

Excavate a 6"x6" trench along the proposed fence line.

STEP 1

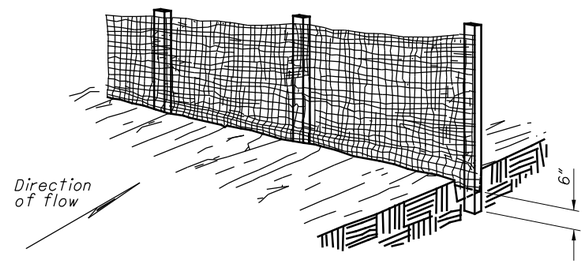

Place fabric and support stakes and extend fabric into the trench.

STEP 2

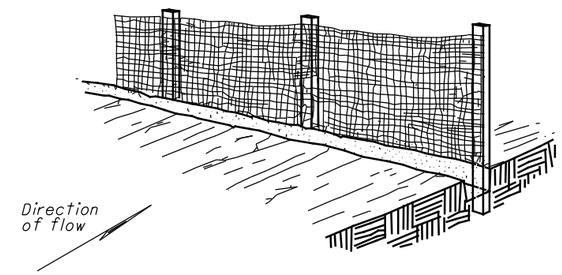

Backfill and compact the excavated soil.

STEP 3

NOTES

MATERIALS:
Furnish 30" wide geotextile fabric with sound wood supports with maximum on-center spacing of 10'. Use geotextile fabric conforming to 712.09, Type C.

CONSTRUCTION:
Trench the geotextile fabric fence as detailed. The contractor may elect to trench the fence detailed on steps 1 through 3 in one plowing operation.

PAYMENT:
The Department will pay for accepted quantities at the prices shown in Appendix F of Supplemental Specification 832 (SS832) for the following items:

- Perimeter Geotextile Fabric Fence

All items shown on this Standard Construction Drawing that are required for construction that are not specifically identified in SS832 Appendix F are considered incidental.

INLET PROTECTION

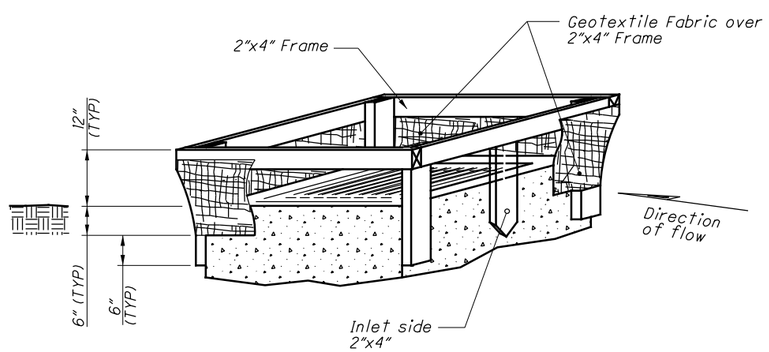

INLET PROTECTION

NOTES

MATERIALS:
Furnish inlet protection consisting of 18" wide geotextile fabric fence with a securely nailed 2"x4" wood frame with a vertically driven 2"x4" on the inlet, or flow, side of the structure. Use geotextile fabric conforming to 712.09, Type C.

CONSTRUCTION:
Construct an 18" wide geotextile fabric fence supported around a storm drain inlet or catch basin with a securely nailed 2"x4" wood frame. Excavate a 6" trench around the inlet, and drive support posts 6" below the excavated trench bottom. Stretch the fabric around the frame. Secure it tightly, ensuring that 6" of fabric is in the trench. Overlap the fabric on one side of the inlet so that the fabric ends are not attached to the same post. Backfill and compact the excavated soil tightly onto the fabric. Place a vertical 2"x4" in the center of the inlet so that the top is at the top of the fence and the bottom is at least 6" below the bottom of the ditch.

PAYMENT:
The Department will pay for accepted quantities at the prices shown in Appendix F of Supplemental Specification 832 (SS832) for the following items:

- Inlet Protection

All items shown on this Standard Construction Drawing that are required for construction that are not specifically identified in SS832 Appendix F are considered incidental.

STATE OF OHIO DEPARTMENT OF TRANSPORTATION HYDRAULIC ENGINEER
Jeffery E. Syar

REVISIONS
4-29-02
7-19-02
12-01-08
4-17-09
7-20-12
1-15-16

ROADWAY HYDRAULIC ENGINEER
M. Cozzoli

OFFICE OF HYDRAULICS ENGINEERING

STANDARD HYDRAULIC CONSTRUCTION DRAWING
CONSTRUCTION EROSION CONTROL

SCD NUMBER
DM-4.4

I:\ODOTcadd\Standards\ODOT\Sheets\SCD\Hydraulics\DM-4.4_2016-01-15.dgn Sheet 2 1/27/2017 10:27:14 AM jyoung6