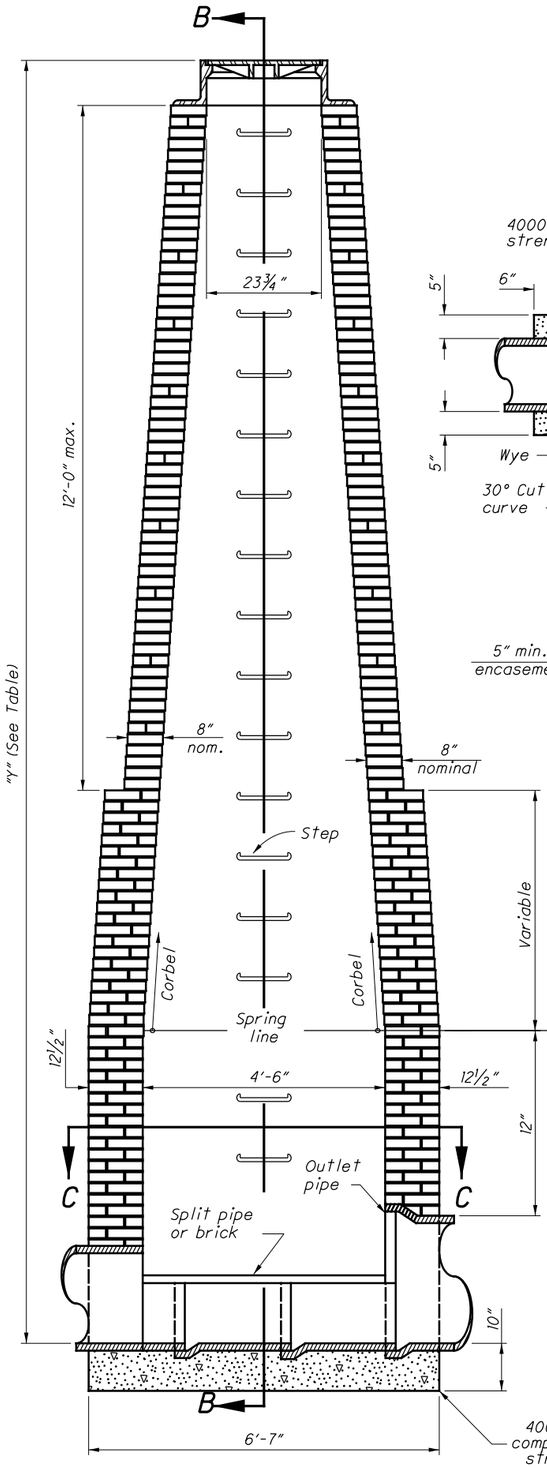

SECTION A-A

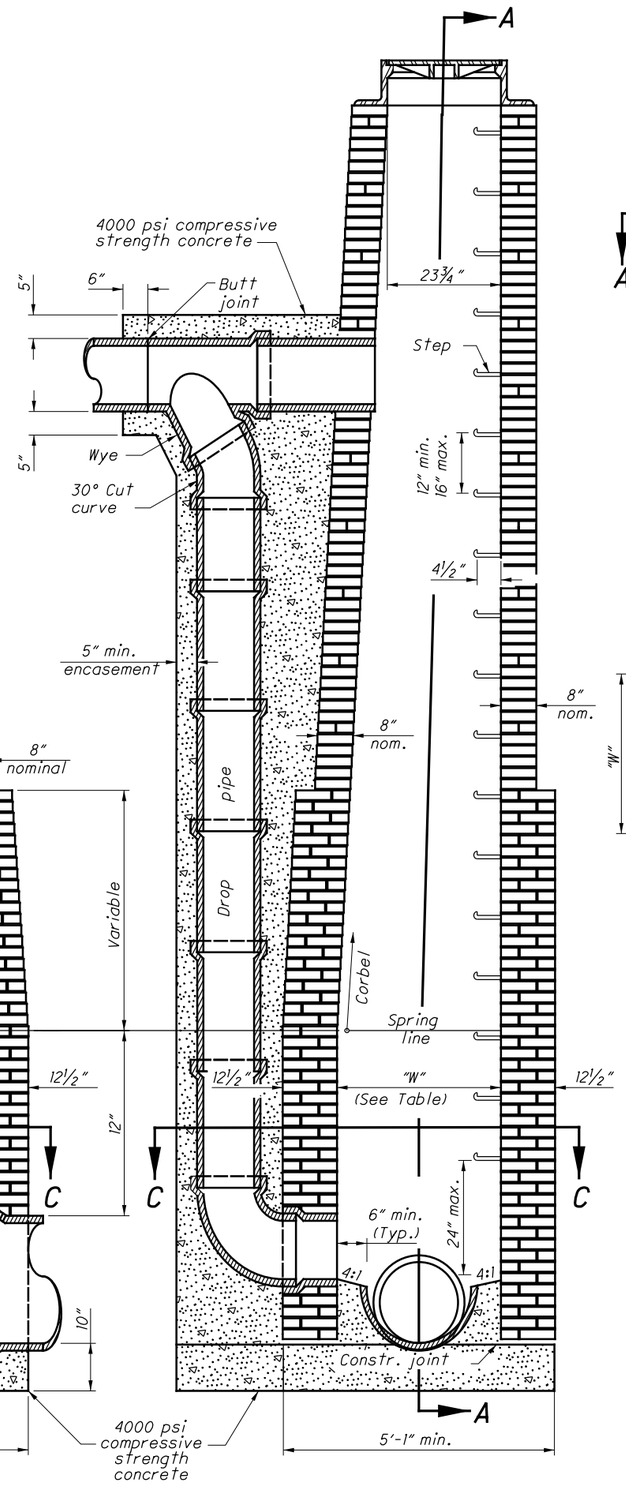

SECTION B-B

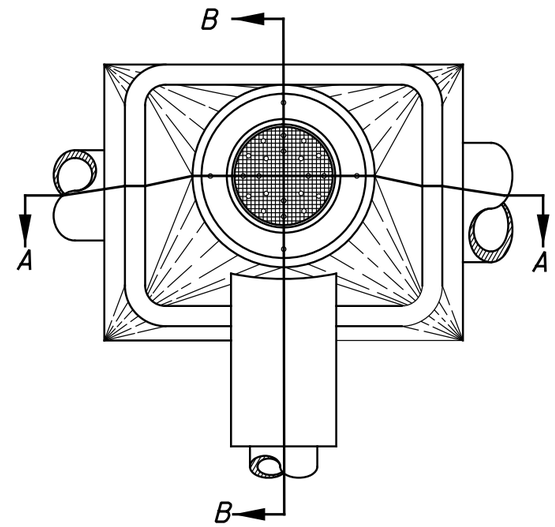

PLAN

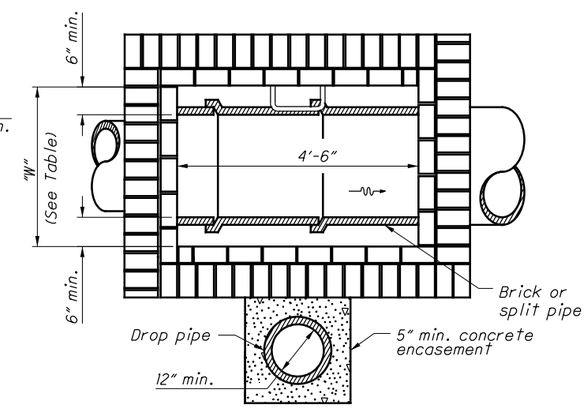

SECTION C-C

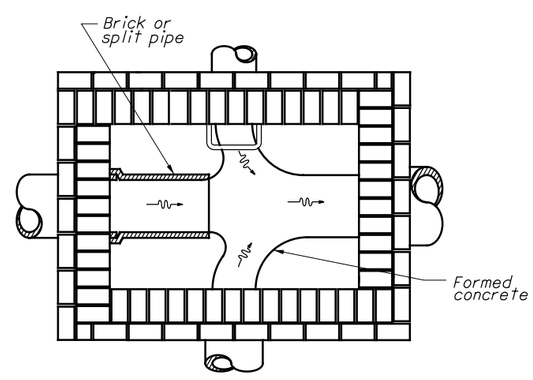

SECTION BELOW SPRING LINE

Showing method of turning side drains which enter the manhole at the flowline.

NOTES

CONSTRUCTION: Build manholes with brick, precast solid concrete blocks or cast-in-place concrete. When manholes are constructed of brick, every sixth course is a stretcher course. Reinforce manholes constructed of 4000 psi compressive strength concrete cast-in-place by placing #5 bars 12" center to center both vertically and horizontally with a 2" clearance from the inside face of the wall. Payment for furnishing and placing reinforcing steel is included in the unit price bid for Item 611.

Construct channel sections in the manhole with split pipe or brick except that curved sections may be built by forming a channel in the concrete.

DROP PIPES: When specified on the plans, construct drop pipes for all conduits carrying sanitary flow which cannot be connected to the manhole within 4', flowline to flowline, as detailed on this drawing.

STEPS, FRAMES AND COVERS: Meet the requirements set forth on **SCD MH-1.1.**

ALTERNATE DESIGN: Precast reinforced concrete manholes detailed on **SCD's MH-1.1, MH-1.3** and **MH-2.1** may be used instead of the design shown, unless otherwise required by the plans.

WALL: Thicknesses are 8" nominal for the top 12' of depth, 12½" for the next 13', 17" for the next 15' and 22½" for the next 15'. Maximum allowable depth is 55'.

Due to the depth requirement above the wall spring line necessary to corbel from dimension "W" to the frame diameter, do not use designs shown unless "Y", measured from flowline to top of cover, is equal to or greater than the minimum depth shown in the following table:

Diameter of outlet pipe.	Width "W" above outlet pipe. (See SECTION B-B)	Min. Depth "Y". Top of cover to flowline. (See SECTION A-A)
12"	3.0'	12.0'
15"		
18"		
21"	3.2'	
24"	3.5'	
27"	3.8'	
30"	4.1'	
33"	4.4'	13.0'
36"	4.7'	14.0'
42"	5.3'	15.5'
48"	5.8'	17.5'
54"	6.4'	19.0'
60"	7.0'	21.0'
66"	7.6'	23.0'
72"	8.2'	24.5'
78"	8.8'	26.0'
84"	9.3'	28.0'
90"	9.9'	30.0'
96"	10.5'	31.5'
102"	11.1'	33.5'
108"	11.7'	35.0'
114"	12.3'	37.0'
120"	12.8'	38.5'

THIS DRAWING REPLACES MH-3.1M DATED 9-6-95.

STATE OF OHIO DEPARTMENT OF TRANSPORTATION HYDRAULIC ENGINEER
Jeffery E. Syar

REVISIONS
7-20-01
7-20-12
1-18-13

ROADWAY HYDRAULIC ENGINEER
M. Cozzoli

OFFICE OF HYDRAULICS ENGINEERING

STANDARD HYDRAULIC CONSTRUCTION DRAWING

MANHOLE No. 2

SCD NUMBER
MH-3.1

1 / 1

I:\ODOTcadd\Standards\ODOT\Sheets\SCD\Hydraulics\MH-3.1_2013-01-18.dgn Sheet 1/27/2017 10:20:32 AM jyoung6