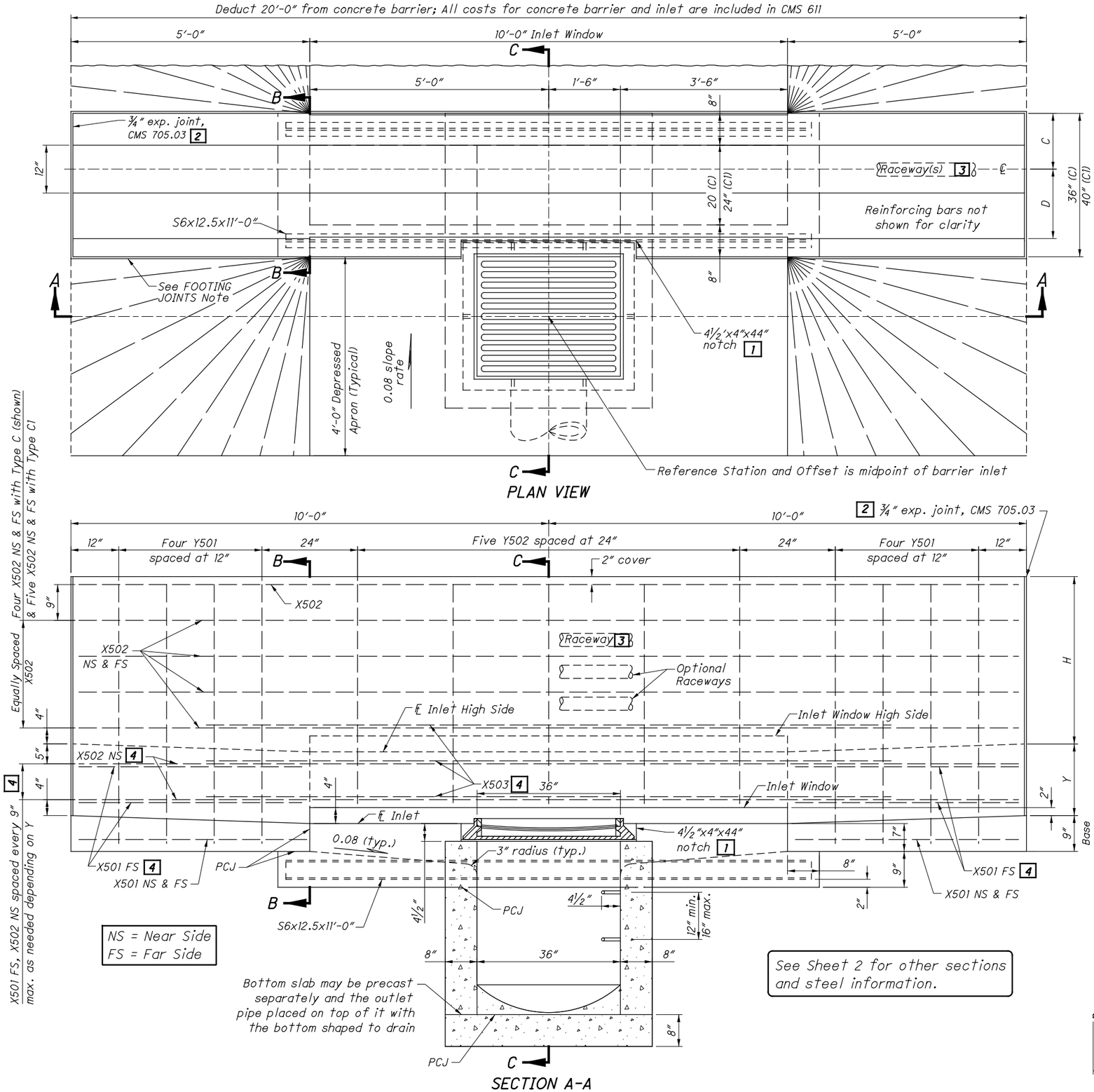

See Sheet 2 for other sections and steel information.

NOTES

GENERAL: For details of Single Slope Concrete Barriers, see SCD RM-4.3.

VARIABLE DIMENSIONS: Y denotes bifrucation and varies from greater than 0 to 24", as shown in the plans. Dimension D is dependent on Y and also varies.

WALLS: The walls between the bottom slab and the upper permissible construction joint may be built of brick, concrete, concrete block, or cast-in-place concrete, 8" nominal thickness for depths of 12' or less. Precast walls have a minimum thickness of 6" and are reinforced sufficiently to permit shipping and handling without damage. The unit above the permissible construction joint may be precast or cast-in-place.

CONCRETE: Provide 4000 psi compressive strength concrete for cast-in -place structures. All precast concrete must meet the requirements of CMS 706.13. Mark the inlet number on the structure. Seal the exposed concrete surfaces of the barrier per Item 512 when specified in the plans.

REINFORCING STEEL: Provide epoxy coated reinforcing steel in accordance with CMS 509.09.

FOOTING JOINTS: Provide a sealed joint with the vertical walls between the barrier footing and a concrete pavement or concrete base as detailed on SCD RM-4.3.

CASTINGS: Minimum mass of frame and cover is 540 lbs. See this sheet for CASTING DETAILS.

Lighter weight frames and grates that meet the requirements of CMS 711.14 may also be provided. Grate openings and dimensions may not differ from those shown unless otherwise shown in the plans.

STEPS: Provide steps according to SCD MH-1.1

GRATE LOCATION: In superelevated curves or at other locations where there is unequal discharge from the directional roadways, locate the inlet grating in the roadway which discharges the major flow.

INLETS OVER 12 FEET IN DEPTH: Provide precast or cast-in-place concrete for inlets over 12 feet in depth. Reinforce with #4 bars on 12" centers both vertically and horizontally with 2" clearance from the inside wall face.

OPENINGS: Ensure pipe openings are the outside diameter of the pipe being supplied plus 2" when fabricated or field cut. Fill any voids per C&MS 611.

PCJ: Permissible construction joint

PAYMENT: Payment will be made at the unit price bid per Each for Item 611 - Inlet No. 3 for Single Slope Barrier, Type (C or C1) and includes all materials, reinforcing steel, castings, labor and incidentals required to construct the inlet as shown. Sealing of exposed concrete and sealing of the barrier will be paid for under Item 512 when specified in the plans.

LEGEND

1. After casting is placed, fill notch with 4000 psi compressive strength concrete.
2. Provide a 1½" minimum exp. joint in concrete pavement or concrete shoulders.
3. 4" electrical raceway. See Sheet 2 for RACEWAY PLACEMENT Details.
4. Number of X501, X502 and X503 reinforcing bars varies depending on the bifurcation (Dimension Y).

STANDARD INLET TYPES

INLET No. 3	H	C	D
Type C	42"	14"	Varies from 14" when Y=0, to 18⅜" when Y=24"
Type C1	57"	16⅞"	Varies from 16⅞" when Y=0, to 21⅜" when Y=24"

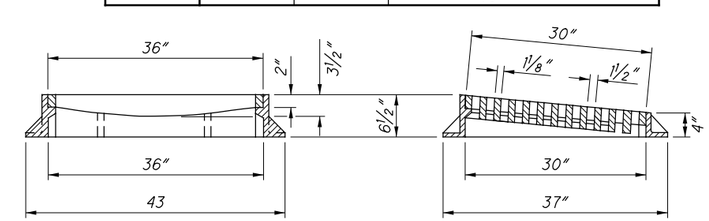

CASTING DETAILS

STATE OF OHIO DEPARTMENT OF TRANSPORTATION HYDRAULIC ENGINEER
Jeffery E. Syar

REVISIONS
7-15-05
7-20-12
1-18-13
1-17-14
1-16-15
1-15-16
7-19-19

ROADWAY HYDRAULIC ENGINEER
M. Cozzoli

OFFICE OF HYDRAULICS ENGINEERING

STANDARD HYDRAULIC CONSTRUCTION DRAWING
INLET No.3 FOR SINGLE SLOPE BARRIER, TYPES C & C1

SCD NUMBER
I-2.2

STEEL LIST (For Estimating Purposes Only)

INLET NO. 3	X501 [4] #5 Bar Straight		X502 [4] #5 Bar Straight		X503 [4] #5 Bar Straight		Y501 #5 Bar Bent		Y502 #5 Bar Bent		S6x12.5	
	No.	Length	No.	Length	No.	Length	No.	Length	No.	Length	No.	Length
Type C	Varies 4 to 8	4′-8″	Varies 9 to 11	19′-8″	Varies 1 to 3	12′-0″	8	Varies 9′-6″ to 13′-11″	5	Varies 9′-1″ to 13′-1″	2	11′-0″
Type C1	Varies 4 to 8	4′-8″	Varies 11 to 13	19′-8″	Varies 1 to 3	12′-0″	8	Varies 12′-6″ to 16′-11″	5	Varies 13′-3″ to 16′-3″	2	11′-0″

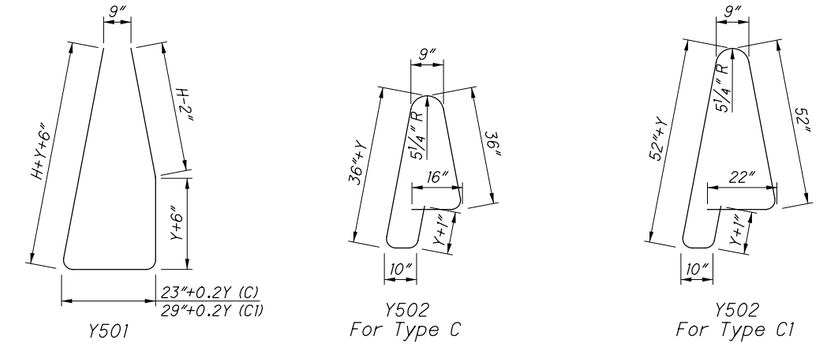

BENDING DIAGRAMS

For Standard Inlet Types, NOTES, LEGEND, Plan View and Section A-A, see Sheet 1.

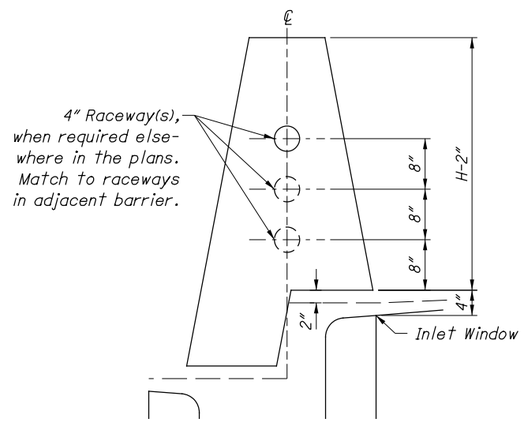

RACEWAY PLACEMENT
(Over Inlet Window)

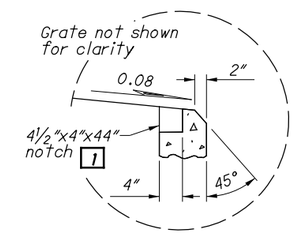

*ALTERNATE SPILLWAY DETAIL

See Standard Inlet Types for C, D & H. For Y see Plans.

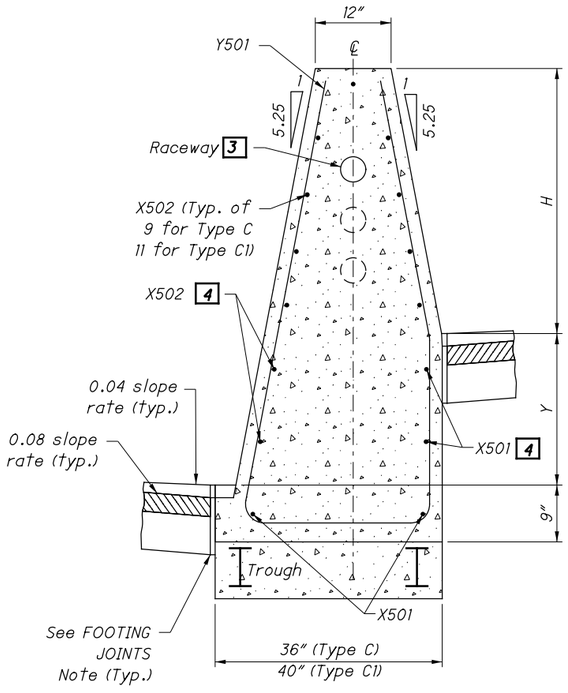

SECTION B-B
See Sheet 1

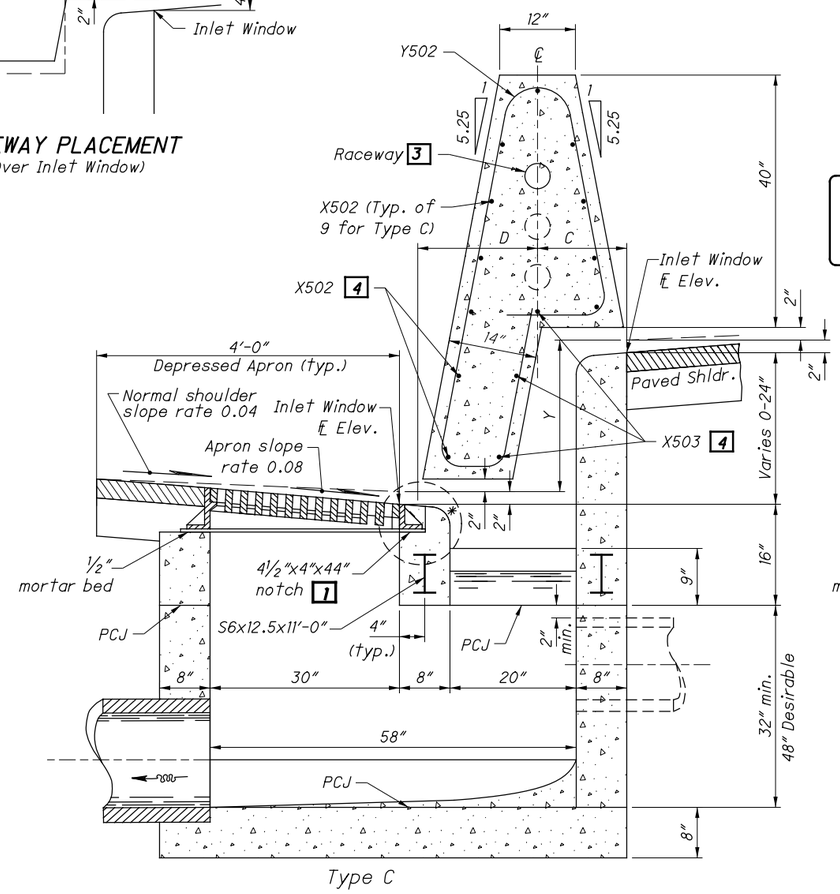

Type C
SECTION C-C
See Sheet 1

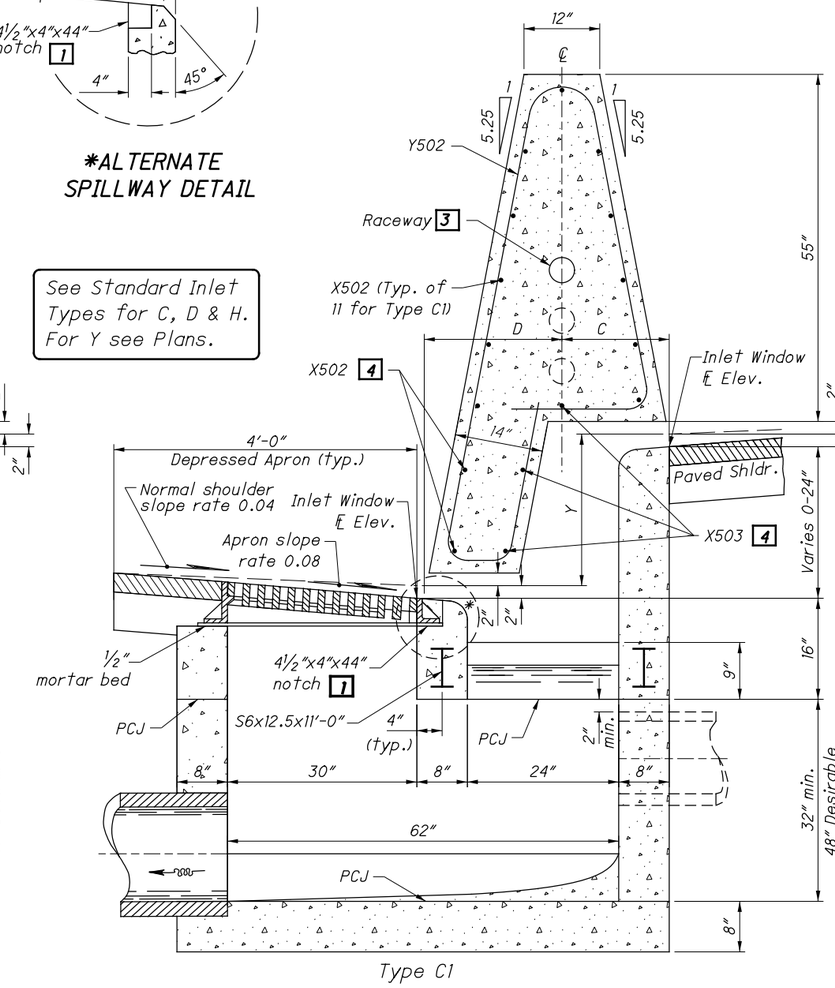

Type C1
SECTION C-C
See Sheet 1

STATE OF OHIO DEPARTMENT OF TRANSPORTATION HYDRAULIC ENGINEER
Jeffery E. Syar

REVISIONS
7-15-05
7-20-12
1-18-13
1-17-14
1-16-15
1-15-16
7-19-19

ROADWAY HYDRAULIC ENGINEER
M. Cozzoli

OFFICE OF HYDRAULICS ENGINEERING

STANDARD HYDRAULIC CONSTRUCTION DRAWING

INLET No. 3 FOR SINGLE SLOPE BARRIER, TYPES C & C1

SCD NUMBER
I-2.2